# GOOYII

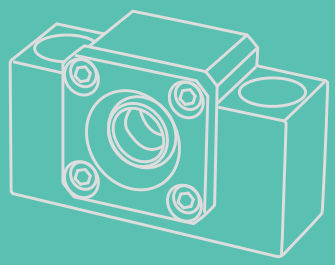

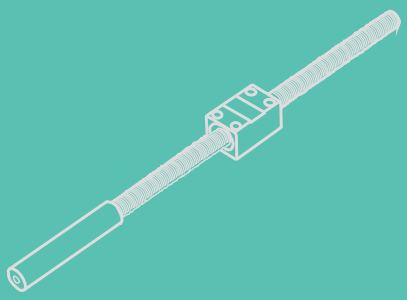

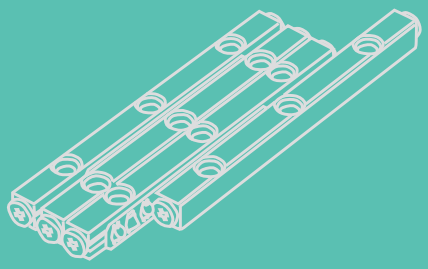

## Product Introduction

GOOYII 2021 New Products

Ball Screw Support Bearing  Precision Ballscrews

Coupling  Slide Rail Set / Table / Miniature Guide Way

GOOYII

Ball Screw
Support Bearing

Coupling

Precision Ballscrews

Slide Rail Set / Table
Miniature Guide Way

# Ball Screw Support Bearing

Model No. Introduction

## Support Units (Fixed Side) Model Introduction

# GOOBK - 20 - S L B - J

| Model | Size | Grade | Pre-Loaded | Surface Finish | Bearing Category |
|---|---|---|---|---|---|

| | | |
|---|---|---|
| GOOBK | Model | GOOAK / GSW / GSWE : Fixed Side-Rectangle Design<br>GOOFK / GRW / GRWE : Fixed Side-Flange Design<br>GOOBK : Fixed Side-Rectangle Design (Two way Mounting)<br>GOOEK : Fixed Side-Protruding Design |
| 20 | Size | GOOAK : 06~25 / GSW : 06~25 / GSWE : 10~25<br>GOOFK : 06~30 / GRW : 06~25 / GRWE : 10~25<br>GOOBK : 10~40 / GEK : 06~20 |

Note : Fixed Side sizes are referred to bearing nominal dimensions.

| | | |
|---|---|---|
| S | Grade | S : Standard(Integrated Angular Contact Ball Bearings)<br>ER : Economic Type, high rigid assembly without axial play. (Integrated with deep-groove ball bearings)<br>EG : Eonomic Type, universal assembly with axial play. (Integrated with deep-groove ball bearings) |

Note : ER and EG models are not specified with pre-loaded.

| | | |
|---|---|---|
| L | Pre-loaded | L : Light Pre-loaded<br>M : Medium Pre-loaded<br>H : Heavy Pre-loaded |
| B | Surface Finish | B : Black Dyed N : Nickel Plating |
| J | Bearing Category | J : Japanese series T : Taiwanese series |

## Support Units (Support Side) Model Introduction

# GOOEF - 20 - S B - J

| Model | Size | Grade | Surface Finish | Bearing Category |
|---|---|---|---|---|

| | | |
|---|---|---|
| GOOEF | Model | GOOAF：Support Side-Rectangle Design<br>GOOFF / GUR / GTR：Support Side-Flange Design<br>GOOBF：Support Side-Rectangle Design (Two way Mounting)<br>GOOEF / GUN / GTN：Support Side-Protruding Design |
| 20 | Size | GOOAF：06~25 / GUN：06~25 / GTN：06~25<br>GOOFF：06~30 / GUR：06~25 / GTR：06~25<br>GOOBF：10~40 / GEF：06~20 |

Note：1. Support side size 06 and 15 ~ 40 are referred to bearing nominal dimensions.
2. Support side size:
- size 08 = bearing i.d. Ø6
- size 10 = bearing i.d. Ø8
- size 12 = bearing i.d. Ø10

| | | |
|---|---|---|
| S | Grade | S：Standard |
| B | Surface Finish | B：Black Dyed N：Nickel Plating |
| J | Bearing Category | J：Japanese series T：Taiwanese series |

Model No. Introduction

## Support Units (Heavy Loading) Model Introduction

# GOOWFF - 20 - B - DFD - J

| Model | Size | Surface Finish | Bearing Combination | Bearing Category |
|---|---|---|---|---|

| | | |
|---|---|---|
| GOOWFF | Model | GOOWFF：Heavy loading |
| 20 | Size | GOOWFF：17~40 |
| B | Surface Finish | B：Black dyed N：Nickel plating |
| DFD | Bearing Combination | DF： Face to face DFD : Face to back to face |
| J | Bearing Category | J：Japanese series T：Taiwanese series |

Note：1. Fixed side sizes are referred to bearing nominal dimensions.
2. GWFF model is applied TAC series angular 60 degrees contact bearings.

Support Bearing Categories

## Support Unit Categories

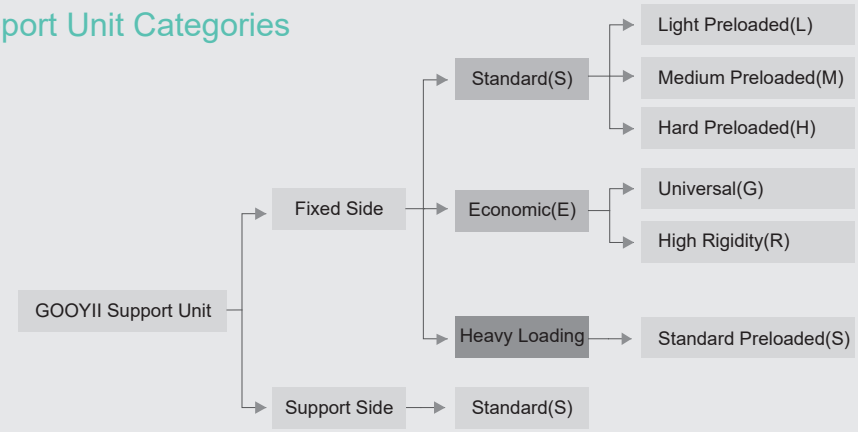


## Differential Points Between GOOYII Standard & Economic Category

Standard type
- Fixed side：Applied angular contact bearings to perform pre-loaded for three different usages - light preloaded, medium preloaded, heavy preloaded.
- Support side：Applied deep-groove bearings.

Economic type：Applied deep-groove bearings to rigid assembly and universal assembly types.

Heavy loading：Applied TAC series angular 60 degree contact bearing to perform heavy pre-loaded. Options of DF or DFD combination per application.

## Preload Selection and Applications

| Preload | Machine Requirements | Application Examples |
|---|---|---|
| Light (L) | Equipments with small vibration and small thrust, load in one fixed direction. High accuracy is not required. Reduction of frictional force. | Laser welder, small CNCmill machine, cutter, welder, automatic tool changer, packing machine, material supply equipment. |
| Medium (M) | Equipments with load on a post. Equipments with a torque acting on it. Equipments working in one direction. Equipments with low load. Equipments with high accuracy. | Automated feeder, linear feeder, automatedpainting machine, precision slide table, Z-axis control on machines, PC board punch machine. Industrial robot, EDM machine, NC lathe. |
| Hard (H) | High rigidity, high vibration, high thrust equipments. High load, high torque equipments. | Machining center spindle, NC lathe, Z-axis spindle of the machinery, milling machine, grinding wheel feeding of grinding machine. |

## Pre-Loaded Description

Purpose of Preloaded：

1. Increase the rotational accuracy of axle.
2. Increase the rigidity of axle.
3. Reduce unwanted clearance.
4. Reduce vibration and noise while bearing stops.

What is bearing preload?

The preload describes the process wherein a permenant thrust road is applied to the bearing, so that the bearing is secure in the groove and has no axial clearence.
Apply normal force (N). Measure value of L of a pair of bearings. L=L1+L2.
Press these pair of bearings on the covers to apply preload and bring these bearings together.

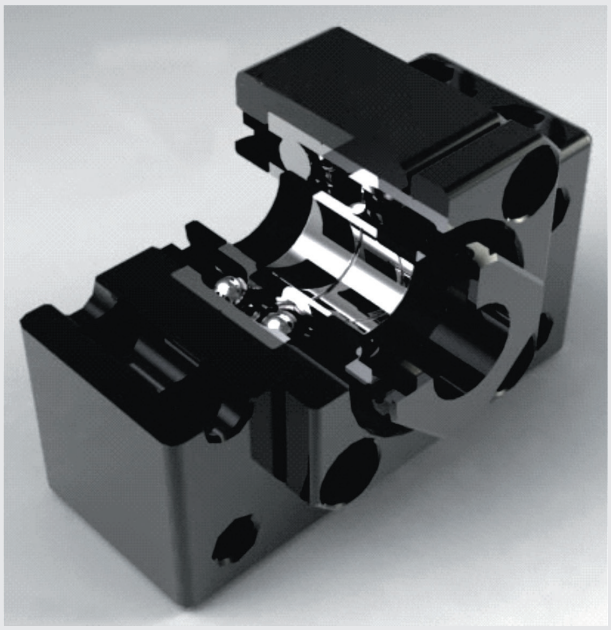

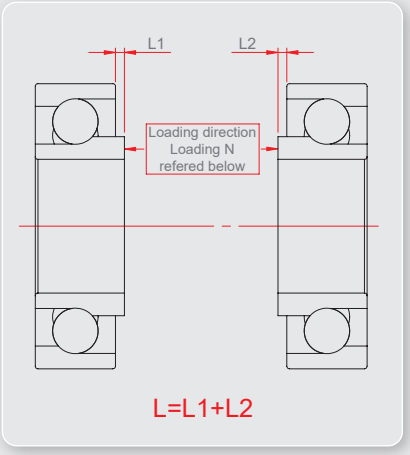

## Assembly Models

### Rectangle Design

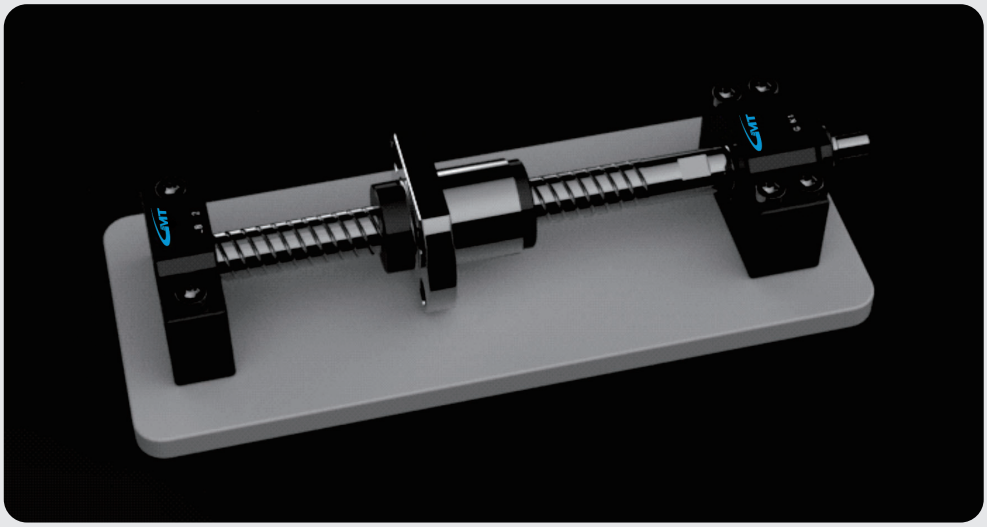

◆ Assembly features : The rectangle design is fited to plane structure which is available for lower assembly required high rigidty applications.

### Flange Design

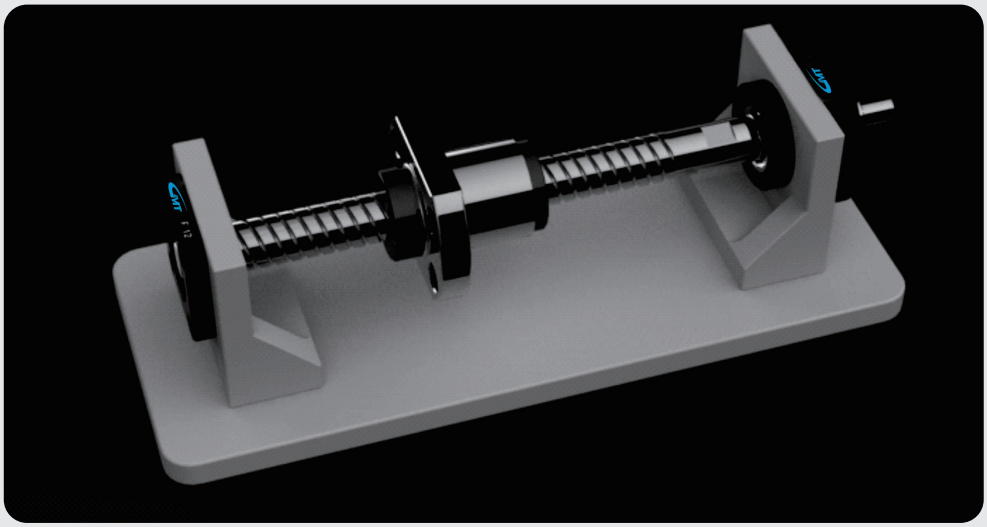

◆ Assembly features : The round design is fited to suspension and spindle structure which is able to be assembled freely according to the equipment height.

Assembly Process

## Assemble The Support Unit to Ballscrew

(1)No disassembly to the support unit fixed side.
(2)Install ballscrew to the fixed side with care not to scratch the external lip of the seal.
(3)Assembly sequence : Install the first space ring to the ballscrew→Install ballscrew to the Fixed Side→Install the second space ring to the ballscrew→Install the Luck nut (tighten after installation)→Install the support side and deep-groove-bearings to the ballscrew→Buckle the snap ring.

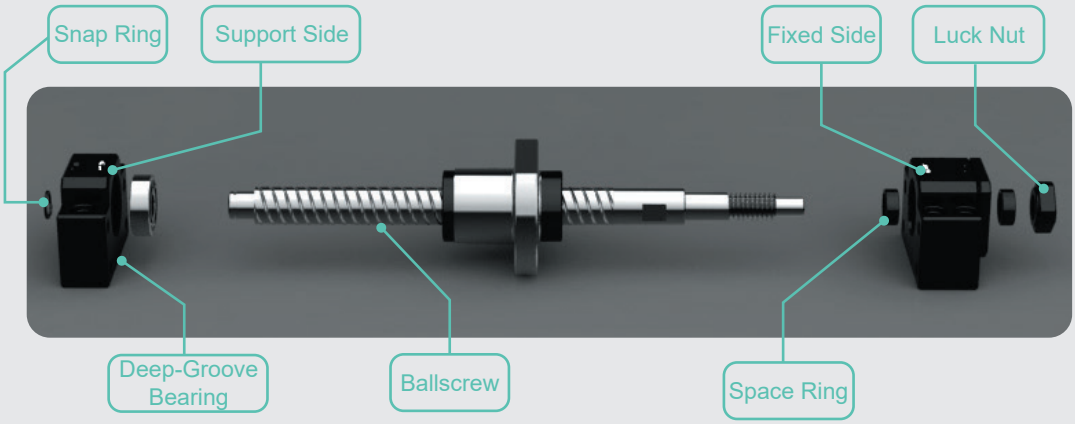


## Assemble The Working Table and Base

Combine ballscrew with the working table→Combine the fixed side with the base→Combine ballscrew with the fixed side→Combine support side and ballscrew→Combine the support side and the base.

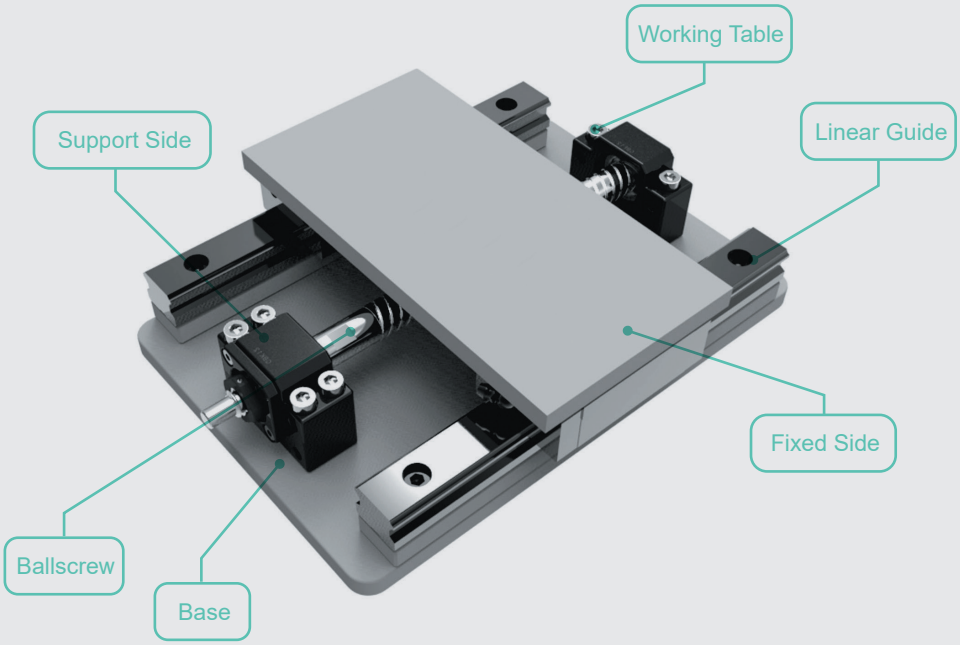

## Calibration and Adjustment

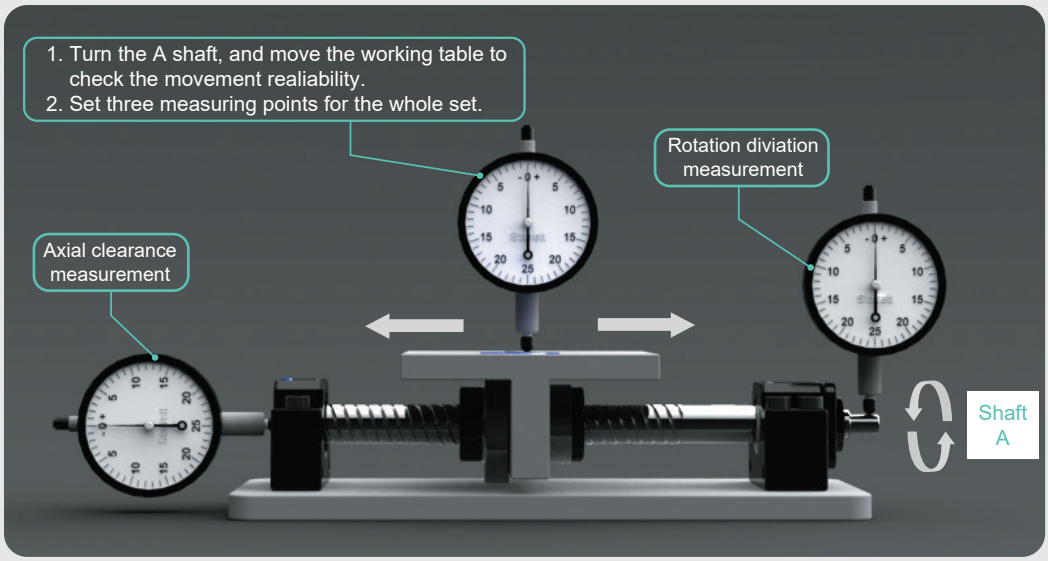


## Assembly with motor

1. Combine the base with the motor bracket.
2. Install the coupling to the motor shaft with the bracket, and calibrate the assembly accuracy.
3. Make trial turning of the motor after installation.

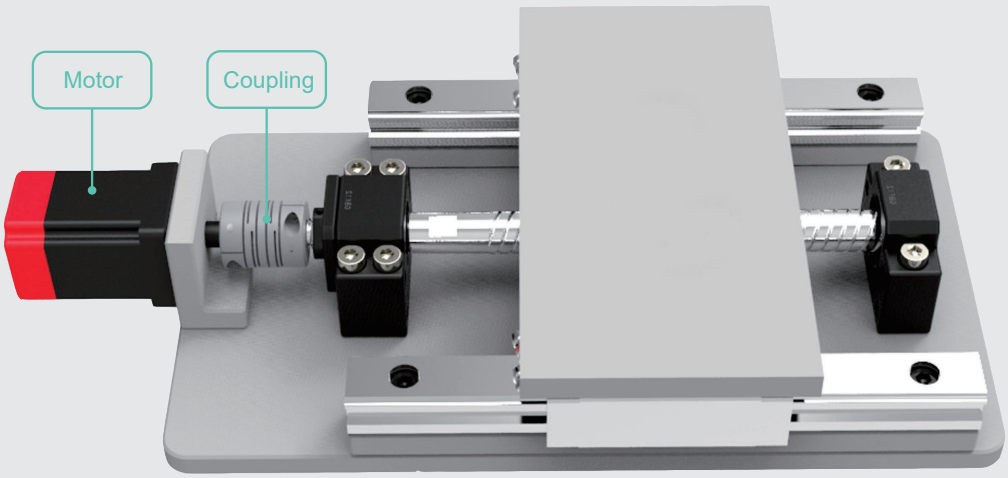

## Inspection Description

### GOOYII Support Unit Inspection - Rectangle & Protruding Design

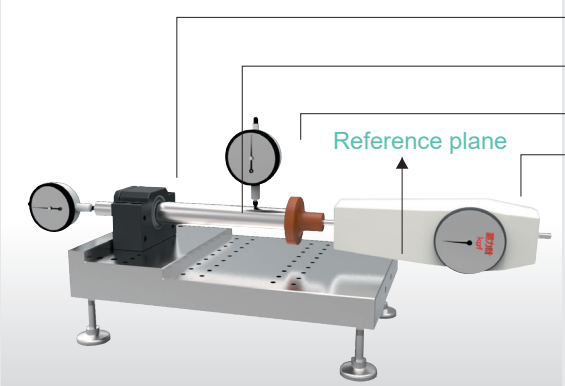


Support Unit - Rectangle & Protruding Design

- Support unit
- Probe
- Index dial
- Pressure gauge

### GOOYII Support Unit Inspection - Round Design

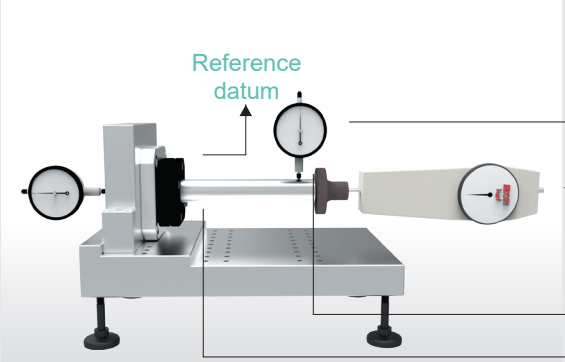


Support Unit - Round Design

- Index dial
- Pressure gauge
- Probe
- Support unit

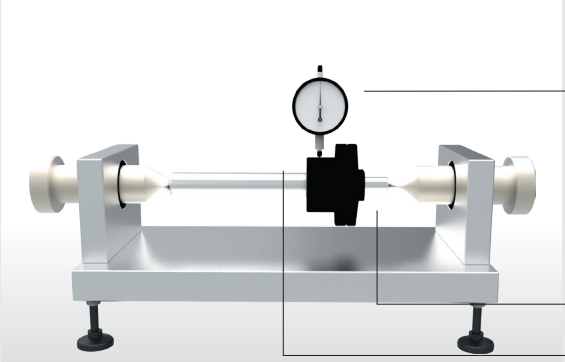

Support Unit - Round Design

- Index dial
- Support unit
- Fixed reference shaft

## Support Bearing Figuration

| GOOAK : Fixed Side Standard P.0031~P.0032 Economic P.0039~P.0040 | | GOOBK : Fixed Side Standard P.0033~P.0044 Economic P.0041~P.0042 | |
|---|---|---|---|
| GOOAK - B Black Dyed | GOOAK - N Ni-Plating | GOOBK - B Black Dyed | GOOBK - N Ni-Plating |
| | | | |

| GOOEK : Fixed Side Standard P.0035~P.0036 Economic P.0043~P.0044 | | GOOFK : Fixed Side Standard P.0037~P.0038 Economic P.0045~P.0046 | |
|---|---|---|---|
| GOOEK - B Black Dyed | GOOEK - N Ni-Plating | GOOFK - B Black Dyed | GOOFK - N Ni-Plating |
| 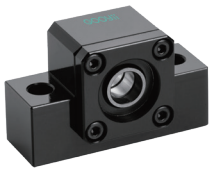 | | | |

| GOOAF : Support Side Standard P.0047~P.0048 | | GOOBF : Support Side Standard P.0049~P.0050 | |
|---|---|---|---|
| GOOAF - B Black Dyed | GOOAF - N Ni-Plating | GOOBF - B Black Dyed | GOOBF - N Ni-Plating |
| | | 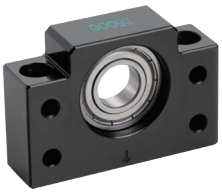 | 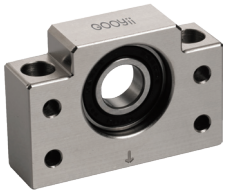 |

| GOOEF : Support Side Standard P.0051~P.0052 | | GOOFF : Support Side Standard P.0053~P.0054 | |
|---|---|---|---|
| GOOEF - B Black Dyed | GOOEF - N Ni-Plating | GOOFF - B Black Dyed | GOOFF - N Ni-Plating |
| 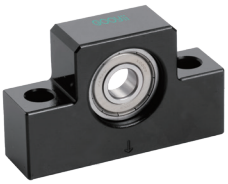 | | 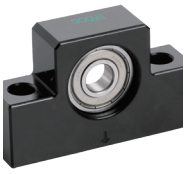 | |

## Support Bearing Figuration

| GOOWFF：Fixed Side Heavy Loadingt | Standard P.0055~P.0056 |
|---|---|
| GOOWFF - B - DF Black Dyed | GOOWFF - N - DF Ni-Plating |
| | |

| GOOSW：Fixed Side | Standard P.0057~P.0058 | GOOSWE：Fixed Side | Standard P.0059~P.0060 |
|---|---|---|---|
| GOOSW - B Black Dyed | GOOSW - N Ni-Plating | GOOSWE - B Black Dyed | GOOSWE - N Ni-Plating |
| | | | |

| GOORW：Fixed Side | Standard P.0061~P.0062 | GOORWE：Fixed Side | Standard P.0063~P.0064 |
|---|---|---|---|
| GOORW - B Black Dyed | GOORW - N Ni-Plating | GOORWE - B Black Dyed | GOORWE - N Ni-Plating |
| | | | |

| GOOUN：Support Side | Standard P.065~P.0066 | GOOTN：Support Side | Standard P.0067~P.0068 |
|---|---|---|---|
| GOOUN - B Black Dyed | GOOUN - N Ni-Plating | GOOTN - B Black Dyed | GOOTN - N Ni-Plating |
| | | | |

## Support Bearing Figuration

| GOOUR : Support Side (Standard P.0069~P.0070) | | GOOTR : Support Side (Standard P.0071~P.0072) | |
|---|---|---|---|
| GOOUR - B Black Dyed | GOOUR - N Ni-Plating | GOOTR - B Black Dyed | GOOTR - N Ni-Plating |
| | | | |

| GOORLN : Lock Nut/Light Loating | | GOOCLN : Lock Nut/Heavy Loading (Standard P.0074) | | GOOSR : Space Ring | |
|---|---|---|---|---|---|
| GOORLN - B Black Dyed | GOORLN - N Ni-Plating | GOOCLN - B Black Dyed | GOOCLN - N Ni-Plating | GOOSR - B Black Dyed | GOOSR - N Ni-Plating |
| | | | | | |

### Selection Notes (Refer to Page 0017, 0018, 0019)

[ Model ] : Pick up the model according to assembly method.

Assembly : 1.Plane mounting : GAK, GBK, GEK, GAF, GBF, GEF, GSW GSWE, GUN, GTN.

2.Suspension and spindle mount : GFK, GRW, GRWE, GFF GUR, GTR.

[ Size ] : Decide the size according to the ballscrew shaft O. D., and the center height.

[ Grade ] : Standard and economic types for options.

[ Pre-loaded ] : Decide pre-loaded of the bearing per needs.

[ Surface Finish ] : Black dyed - Regular environment use, low humidity.
Nickel plating - Clean room use.

[ Bearing category ] : Available Japanese series and Taiwanese series.

# Product Specification

## Support Units

## Fixed Side Standard Type | Rectangle Design | GOOAK

| Model No. | Parts No. ①③④⑥ | |
|---|---|---|
| | Material | Surface Finish |
| GOOAK□□-S□B | S50C | Black Dyed |
| GOOAK□□-S□N | | Ni-Plating |

### GOOAK10 ~ GOOAK20

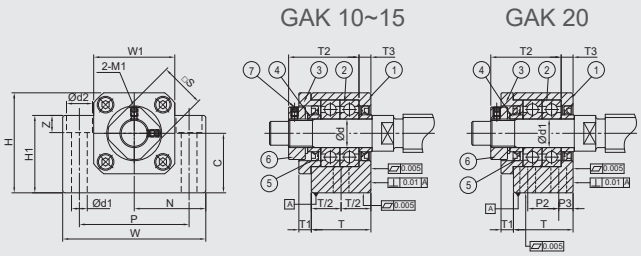


### GOOAK06 ~ GOOAK08

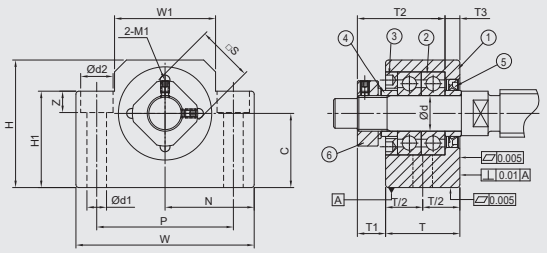


### GOOAK25

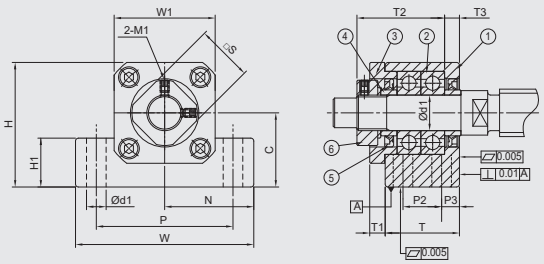


## Specification

| Standard Type | | | Dimensions | | | | | | | | | | | | | | |
|---|---|---|---|---|---|---|---|---|---|---|---|---|---|---|---|---|---|
| Light pre-loaded | Medium pre-loaded | Hard pre-loaded | Ød | T | T1 | T2 | T3 | W | W1 | H | H1 | N ±0.02 | C $^{0}_{-0.02}$ | P | P2 | P3 | Ød1 |
| GOOAK06-SL□ | GOOAK06-SM□ | GOOAK06-SH□ | 6 | 20 | 5.5 | 22 | 3.5 | 42 | 18 | 25 | 20 | 21 | 13 | 30 | - | - | 5.5 |
| GOOAK08-SL□ | GOOAK08-SM□ | GOOAK08-SH□ | 8 | 23 | 7 | 26 | 4 | 52 | 25 | 32 | 26 | 26 | 17 | 38 | - | - | 6.6 |
| GOOAK10-SL□ | GOOAK10-SM□ | GOOAK10-SH□ | 10 | 24 | 6 | 29.5 | 6 | 70 | 36 | 43 | 35 | 35 | 25 | 52 | - | - | 8.7 |
| GOOAK12-SL□ | GOOAK12-SM□ | GOOAK12-SH□ | 12 | 24 | 6 | 29.5 | 6 | 70 | 36 | 43 | 35 | 35 | 25 | 52 | - | - | 8.7 |
| GOOAK15-SL□ | GOOAK15-SM□ | GOOAK15-SH□ | 15 | 25 | 6 | 32 | 5 | 80 | 40 | 50 | 40 | 40 | 30 | 60 | - | - | 10.7 |
| GOOAK20-SL□ | GOOAK20-SM□ | GOOAK20-SH□ | 20 | 42 | 10 | 50 | 10 | 95 | 56 | 58 | 45 | 47.5 | 30 | 75 | 22 | 10 | 10.7 |
| GOOAK25-SL□ | GOOAK25-SM□ | GOOAK25-SH□ | 25 | 48 | 13 | 60 | 14 | 105 | 66 | 68 | 25 | 52.5 | 35 | 85 | 30 | 9 | 11 |

| Ordering Example | GOOAK | - | 10 | - | SL | - | N | - | J |
|---|---|---|---|---|---|---|---|---|---|
| | Model No. | | Shaft Dia. | | Grade/Pre-loaded | | Surface finish | | Bearing category |

GOOAK-B

GOOAK-N

## Components

| No. | Parts | Material | Q´ty |
|---|---|---|---|
| ① | Main housing | S50C | 1 |
| ② | Bearing | SUJ2 | 1 pair |
| ③ | Cover | S50C | 1 |
| ④ | Space ring | S50C | 2 |
| ⑤ | Seal (<Ø8 one seal only) | NBR | 2 |
| ⑥ | Locknut | S50C | 1 |

- ①②③ are in one unit. No disassemble for accuracy concern.
- Bearing filled with proper lithium soap lubricant and sealed.

## Recommended Processing Dimensions of Shaft

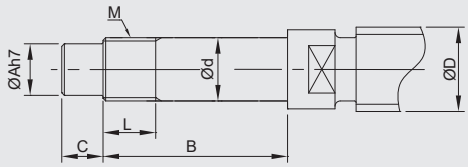


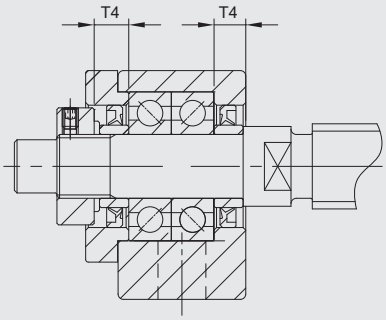


Unit：mm

| | | | | Recommended Processing Dimensions of Shaft | | | | | | | |
|---|---|---|---|---|---|---|---|---|---|---|---|
| | | | | Ball Screw Shaft O. D. | Shaft End Diameter | Processing Sizes of Shaft | | | Nominal Thread | | Space Ring Length |
| Ød2 | Z | M1 | □S | ØD | Ød | ØA | B | C | M | L | T4 |
| 9.5 | 7 | M3 | 12 | 8 / 10 | $6^{-0.005}_{-0.012}$ | 5 | 27 | 8 | M6*P0.75 | 6 | 5 |
| 11 | 12 | M3 | 14 | 10 / 12 | $8^{-0.005}_{-0.012}$ | 6.5 | 31.5 | 7.5 | M8*P1.0 | 7 | 5.5 |
| 14 | 11 | M3 | 16 | 12 / 14 / 15 | $10^{-0.005}_{-0.012}$ | 8 | 36 | 15 | M10*P1.0 | 11 | 5.5 |
| 14 | 11 | M3 | 19 | 14 / 15 / 16 | $12^{-0.005}_{-0.012}$ | 10 | 36 | 15 | M12*P1.0 | 11 | 5.5 |
| 17 | 15 | M3 | 22 | 18 / 20 | $15^{-0.005}_{-0.014}$ | 12 | 47 | 20 | M15*P1.0 | 13 | 6 |
| 17 | 15 | M4 | 30 | 25 / 28 / 30 | $20^{-0.005}_{-0.014}$ | 17 | 62 | 25 | M20*P1.0 | 17 | 11 |
| - | - | M5 | 35 | 28 / 30 / 32 | $25^{-0.005}_{-0.014}$ | 22 | 75 | 18 | M25*P1.5 | 20 | 15 |

- Supported Side spec refer to P.0047~P.0048

## Fixed Side Standard Type (Two-Way Mounting Design) | Rectangle Design | GOOBK

| Model No. | Parts No. ①③④⑥ | |
|---|---|---|
| | Material | Surface Finish |
| GOOBK□□-S□B | S50C | Black Dyed |
| GOOBK□□-S□N | | Ni-Plating |

GOOBK-B

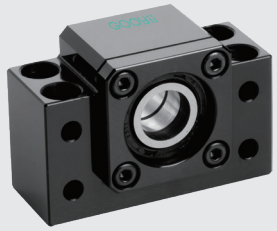

GOOBK10 ~ GOOBK40

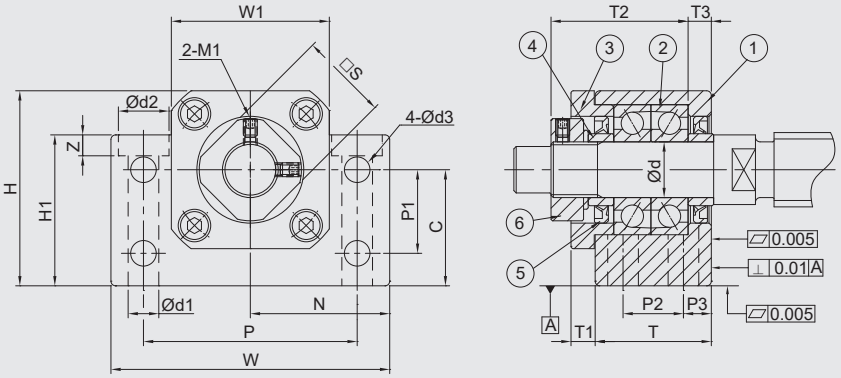


## Specification

| Standard Type | | | Dimensions | | | | | | | | | | | | | | |
|---|---|---|---|---|---|---|---|---|---|---|---|---|---|---|---|---|---|
| Light pre-loaded | Medium pre-loaded | Hard pre-loaded | Ød | T | T1 | T2 | T3 | W | W1 | H | H1 | N ±0.02 | C $^{0}_{-0.02}$ | P | P1 | P2 | P3 |
| GOOBK10-SL□ | GOOBK10-SM□ | GOOBK10-SH□ | 10 | 25 | 5 | 29.5 | 5 | 60 | 34 | 39 | 32.5 | 30 | 22 | 46 | 15 | 13 | 6 |
| GOOBK12-SL□ | GOOBK12-SM□ | GOOBK12-SH□ | 12 | 25 | 5 | 29.5 | 5 | 60 | 34 | 42 | 32.5 | 30 | 25 | 46 | 18 | 13 | 6 |
| GOOBK15-SL□ | GOOBK15-SM□ | GOOBK15-SH□ | 15 | 27 | 6 | 32 | 6 | 70 | 38 | 47 | 38 | 35 | 28 | 54 | 18 | 15 | 6 |
| GOOBK17-SL□ | GOOBK17-SM□ | GOOBK17-SH□ | 17 | 35 | 9 | 44 | 7 | 86 | 48 | 63 | 55 | 43 | 39 | 68 | 28 | 19 | 8 |
| GOOBK20-SL□ | GOOBK20-SM□ | GOOBK20-SH□ | 20 | 35 | 8 | 43 | 8 | 88 | 50 | 59 | 50 | 44 | 34 | 70 | 22 | 19 | 8 |
| GOOBK25-SL□ | GOOBK25-SM□ | GOOBK25-SH□ | 25 | 42 | 12 | 54 | 9 | 106 | 62 | 79 | 70 | 53 | 48 | 85 | 33 | 22 | 10 |
| GOOBK30-SL□ | GOOBK30-SM□ | GOOBK30-SH□ | 30 | 45 | 14 | 61 | 9 | 128 | 74 | 88 | 78 | 64 | 51 | 102 | 33 | 23 | 11 |
| GOOBK35-SL□ | GOOBK35-SM□ | GOOBK35-SH□ | 35 | 50 | 14 | 67 | 12 | 140 | 86 | 95 | 79 | 70 | 52 | 114 | 35 | 26 | 12 |
| GOOBK40-SL□ | GOOBK40-SM□ | GOOBK40-SH□ | 40 | 61 | 18 | 76 | 15 | 160 | 98 | 109 | 90 | 80 | 60 | 130 | 37 | 33 | 14 |

| Ordering Example | GOOBK | - | 10 | - | SL | - | N | - | J |
|---|---|---|---|---|---|---|---|---|---|
| | Model No. | | Shaft Dia. | | Grade/Pre-loaded | | Surface finish | | Bearing category |

## Fixed Side Standard Type (Two-Way Mounting Design) | Rectangle Design | GOOBK



### GOOBK-N

### Components

| No. | Parts | Material | Q´ty |
|---|---|---|---|
| ① | Main housing | S50C | 1 |
| ② | Bearing | SUJ2 | 1 pair |
| ③ | Cover | S50C | 1 |
| ④ | Space ring | S50C | 2 |
| ⑤ | Seal (<Ø8 one seal only) | NBR | 2 |
| ⑥ | Locknut | S50C | 1 |

- ①②③ are in one unit. No disassemble for accuracy concern.
- Bearing filled with proper lithium soap lubricant and sealed.

### Recommended Processing Dimensions of Shaft

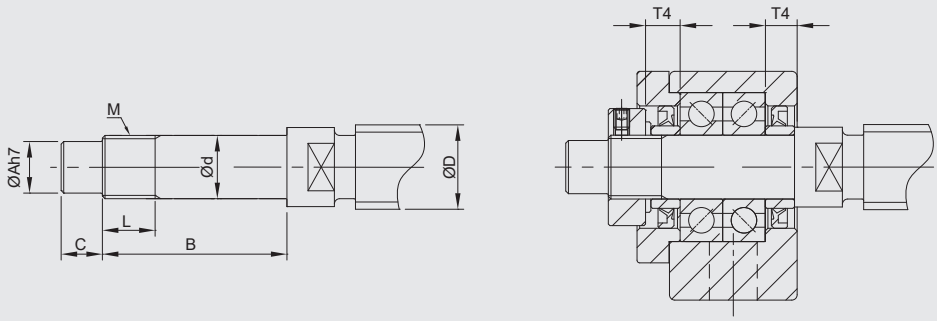


Unit：mm

| | | | | | | Recommended Processing Dimensions of Shaft | | | | | | | |
|---|---|---|---|---|---|---|---|---|---|---|---|---|---|
| | | | | | | Ball Screw Shaft O. D. | Shaft End Diameter | Processing Sizes of Shaft | | | Nominal Thread | | Space Ring Length |
| Ød1 | Ød2 | Z | Ød3 | M1 | □S | ØD | Ød | ØA | B | C | M | L | T4 |
| 6.3 | 10.5 | 6.5 | 5.5 | M3 | 16 | 12 / 14 / 15 | $10^{-0.005}_{-0.012}$ | 8 | 36 | 15 | M10*P1.0 | 16 | 5.5 |
| 6.3 | 10.5 | 1.5 | 5.5 | M3 | 19 | 14 / 15 / 16 | $12^{-0.005}_{-0.012}$ | 10 | 36 | 15 | M12*P1.0 | 14 | 5.5 |
| 6.3 | 10.5 | 6.5 | 5.5 | M3 | 22 | 18 / 20 | $15^{-0.005}_{-0.014}$ | 12 | 40 | 20 | M15*P1.0 | 12 | 6 |
| 8.7 | 14 | 8.6 | 6.6 | M4 | 24 | 20 / 25 | $17^{-0.005}_{-0.014}$ | 15 | 53 | 23 | M17*P1.0 | 17 | 7 |
| 8.7 | 14 | 8.5 | 6.6 | M4 | 30 | 25 / 28 | $20^{-0.005}_{-0.014}$ | 17 | 53 | 25 | M20*P1.0 | 15 | 8 |
| 10.7 | 17.5 | 10.8 | 9 | M5 | 35 | 32 / 36 | $25^{-0.005}_{-0.014}$ | 20 | 65 | 30 | M25*P1.5 | 18 | 9 |
| 13.7 | 20 | 13 | 11 | M6 | 40 | 36 / 40 | $30^{-0.005}_{-0.015}$ | 25 | 72 | 38 | M30*P1.5 | 25 | 9 |
| 13.7 | 20 | 13 | 11 | M8 | 50 | 45 | $35^{-0.005}_{-0.015}$ | 30 | 81 | 45 | M35*P1.5 | 28 | 12 |
| 17.7 | 26 | 17.5 | 14 | M8 | 50 | 50 | $40^{-0.005}_{-0.015}$ | 35 | 93 | 50 | M40*P1.5 | 35 | 15 |

• Supported Side spec refer to P.0049~P.0050

## Fixed Side Standard Type | Protruding Design | GOOEK

| Model No. | Parts No. ①③④⑥ | |
|---|---|---|
| | Material | Surface Finish |
| GOOEK □□ - S □B | S50C | Black Dyed |
| GOOEK □□ - S □N | | Ni-Plating |

### GOOEK-B

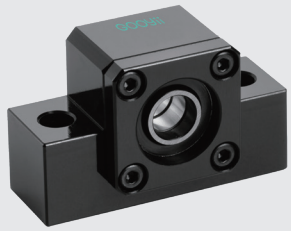

### GOOEK06 ~ GOOEK08

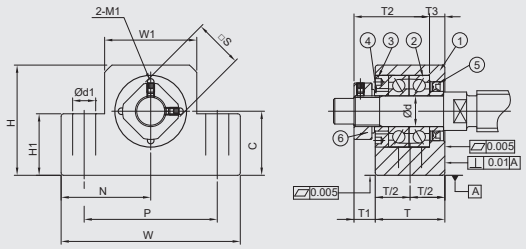


### GOOEK10 ~ GOOEK20

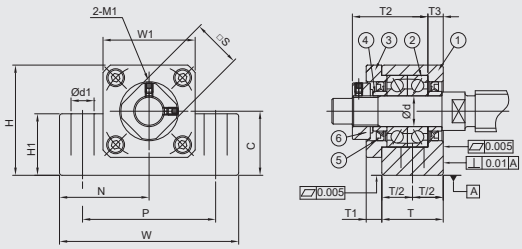


## Specification

| Standard Type | | | Dimensions | | | | | | | | | | | |
|---|---|---|---|---|---|---|---|---|---|---|---|---|---|---|
| Light pre-loaded | Medium pre-loaded | Hard pre-loaded | Ød | T | T1 | T2 | T3 | W | W1 | H | H1 | N ±0.02 | C $^{0}_{-0.02}$ | P |
| GOOEK06-SL□ | GOOEK06-SM□ | GOOEK06-SH□ | 6 | 20 | 5.5 | 22 | 3.5 | 42 | 20 | 25 | 12 | 21 | 13 | 30 |
| GOOEK08-SL□ | GOOEK08-SM□ | GOOEK08-SH□ | 8 | 23 | 7 | 26 | 4 | 52 | 27 | 32 | 16 | 26 | 17 | 38 |
| GOOEK10-SL□ | GOOEK10-SM□ | GOOEK10-SH□ | 10 | 24 | 6 | 29.5 | 6 | 70 | 36 | 43 | 24 | 35 | 25 | 52 |
| GOOEK12-SL□ | GOOEK12-SM□ | GOOEK12-SH□ | 12 | 24 | 6 | 29.5 | 6 | 70 | 36 | 43 | 24 | 35 | 25 | 52 |
| GOOEK15-SL□ | GOOEK15-SM□ | GOOEK15-SH□ | 15 | 25 | 6 | 32 | 5 | 80 | 40 | 50 | 25 | 40 | 30 | 60 |
| GOOEK20-SL□ | GOOEK20-SM□ | GOOEK20-SH□ | 20 | 42 | 10 | 50 | 10 | 95 | 56 | 58 | 25 | 47.5 | 30 | 75 |

| Ordering Example | GOOEK | - | 10 | - | SL | - | N | - | J |
|---|---|---|---|---|---|---|---|---|---|
| | Model No. | | Shaft Dia. | | Grade/Pre-loaded | | Surface finish | | Bearing category |

## GOOEK-N

## Components

| No. | Parts | Material | Q´ty |
|---|---|---|---|
| ① | Main housing | S50C | 1 |
| ② | Bearing | SUJ2 | 1 pair |
| ③ | Cover | S50C | 1 |
| ④ | Space ring | S50C | 2 |
| ⑤ | Seal (<Ø8 one seal only) | NBR | 2 |
| ⑥ | Locknut | S50C | 1 |

- ①②③ are in one unit. No disassemble for accuracy concern.
- Bearing filled with proper lithium soap lubricant and sealed.

## Recommended Processing Dimensions of Shaft

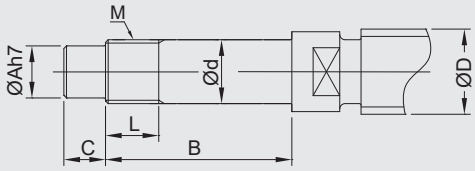


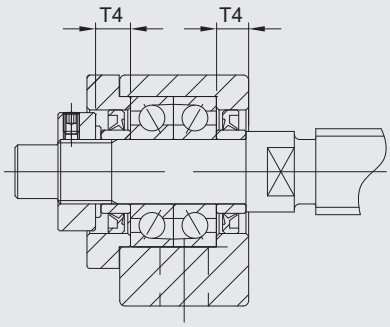


Unit：mm

| | | | Recommended Processing Dimensions of Shaft | | | | | | | |
|---|---|---|---|---|---|---|---|---|---|---|
| | | | Ball Screw Shaft O. D. | Shaft End Diameter | Processing Sizes of Shaft | | | Nominal Thread | | Space Ring Length |
| Ød1 | M1 | □S | ØD | Ød | ØA | B | C | M | L | T4 |
| 5.2 | M3 | 12 | 5 | $6^{-0.005}_{-0.012}$ | 4 | 28 | 8 | M6*P0.75 | 8 | 5 |
| 6.3 | M3 | 14 | 10 / 12 | $8^{-0.005}_{-0.012}$ | 6 | 32 | 9 | M8*P1.0 | 10 | 5.5 |
| 9 | M3 | 16 | 12 / 14 / 15 | $10^{-0.005}_{-0.012}$ | 8 | 36 | 15 | M10*P1.0 | 11 | 5.5 |
| 9 | M3 | 19 | 14 / 15 / 16 | $12^{-0.005}_{-0.012}$ | 10 | 36 | 15 | M12*P1.0 | 11 | 5.5 |
| 11 | M3 | 22 | 18 / 20 | $15^{-0.005}_{-0.014}$ | 12 | 40 | 20 | M15*P1.0 | 13 | 6 |
| 11 | M4 | 30 | 25 / 28 / 30 | $20^{-0.005}_{-0.014}$ | 17 | 62 | 25 | M20*P1.0 | 17 | 11 |

• Supported Side spec refer to P.0051~P.0052

## Fixed Side Standard Type | Flange Design | GOOFK

| Model No. | Parts No. ①③④⑥ | |
|---|---|---|
| | Material | Surface Finish |
| GOOFK□□-S□B | S50C | Black Dyed |
| GOOFK□□-S□N | | Ni-Plating |

GOOFK-B

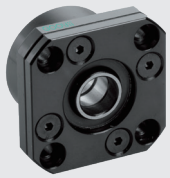

### GOOFK06 ~ GOOFK08

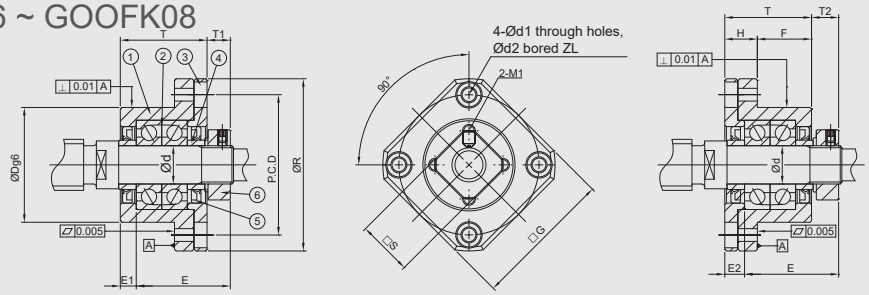


### GOOFK10 ~ GOOFK30

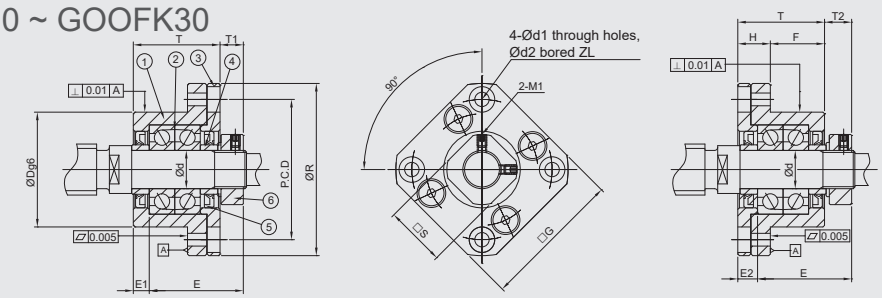


## Specification

| Standard Type | | | Dimensions | | | | | | | | | | | | |
|---|---|---|---|---|---|---|---|---|---|---|---|---|---|---|---|
| Light pre-loaded | Medium pre-loaded | Hard pre-loaded | Ød | ØR | □G | T | H | F | $ØD^{-0.01}_{-0.03}$ | E | Installation (A) | | Installation (B) | | PCD |
| | | | | | | | | | | | T1 | E1 | T2 | E2 | |
| GOOFK06-SL□ | GOOFK06-SM□ | GOOFK06-SH □ | 6 | 36 | 28 | 20 | 7 | 13 | 22 | 22 | 5.5 | 3.5 | 6.5 | 4.5 | 28 |
| GOOFK08-SL□ | GOOFK08-SM□ | GOOFK08-SH □ | 8 | 43 | 35 | 23 | 9 | 14 | 28 | 26 | 7 | 4 | 8 | 5 | 35 |
| GOOFK10-SL□ | GOOFK10-SM□ | GOOFK10-SH □ | 10 | 52 | 42 | 27 | 10 | 17 | 34 | 29.5 | 7.5 | 5 | 8.5 | 6 | 42 |
| GOOFK12-SL□ | GOOFK12-SM□ | GOOFK12-SH □ | 12 | 54 | 44 | 27 | 10 | 17 | 36 | 29.5 | 7.5 | 5 | 8.5 | 6 | 44 |
| GOOFK15-SL□ | GOOFK15-SM□ | GOOFK15-SH □ | 15 | 63 | 52 | 32 | 15 | 17 | 40 | 36 | 10 | 6 | 12 | 8 | 50 |
| GOOFK17-SL□ | GOOFK17-SM□ | GOOFK17-SH □ | 17 | 77 | 61 | 45 | 22 | 23 | 50 | 47 | 11 | 9 | 14 | 12 | 62 |
| GOOFK20-SL□ | GOOFK20-SM□ | GOOFK20-SH □ | 20 | 85 | 68 | 52 | 22 | 30 | 57 | 50 | 8 | 10 | 12 | 14 | 70 |
| GOOFK25-SL□ | GOOFK25-SM□ | GOOFK25-SH □ | 25 | 98 | 79 | 57 | 27 | 30 | 63 | 60 | 13 | 10 | 20 | 17 | 80 |
| GOOFK30-SL□ | GOOFK30-SM□ | GOOFK30-SH □ | 30 | 117 | 93 | 62 | 30 | 32 | 75 | 61 | 11 | 12 | 17 | 18 | 95 |

| Ordering Example | GOOFK | - | 10 | - | SL | - | N | - | J |
|---|---|---|---|---|---|---|---|---|---|
| | Model No. | | Shaft Dia. | | Grade/Pre-loaded | | Surface finish | | Bearing category |

## Fixed Side Standard Type | Flange Design | GOOFK



### GOOFK-N

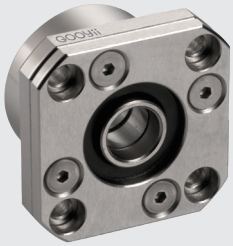

## Components

| No. | Parts | Material | Q´ty |
|---|---|---|---|
| ① | Main housing | S50C | 1 |
| ② | Bearing | SUJ2 | 1 pair |
| ③ | Cover | S50C | 1 |
| ④ | Space ring | S50C | 2 |
| ⑤ | Seal (<Ø8 one seal only) | NBR | 2 |
| ⑥ | Locknut | S50C | 1 |

- ①②③ are in one unit. No disassemble for accuracy concern.
- Bearing filled with proper lithium soap lubricant and sealed.

## Recommended Processing Dimensions of Shaft

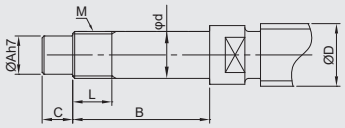


Installation(A)

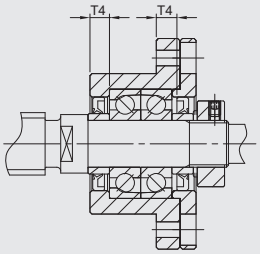


Installation(B)

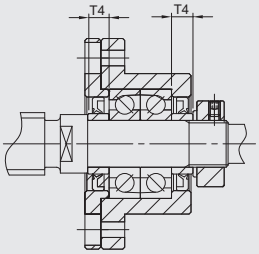


Unit：mm

| | | | | | Recommended Processing Dimensions of Shaft | | | | | | | |
|---|---|---|---|---|---|---|---|---|---|---|---|---|
| | | | | | Ball Screw Shaft O. D. | Shaft End Diameter | Processing Sizes of Shaft | | | Nominal Thread | | Space Ring Length |
| Ød1 | Ød2 | Z | M1 | □S | ØD | Ød | ØA | B | C | M | L | T4 |
| 3.4 | 6 | 3.3 | M3 | 12 | 8 | $6^{-0.005}_{-0.012}$ | 4 | 28 | 8 | M6*P0.75 | 8 | 5 |
| 3.4 | 6 | 3.3 | M3 | 14 | 10 / 12 | $8^{-0.005}_{-0.012}$ | 6 | 32 | 9 | M8*P1.0 | 10 | 5.5 |
| 4.5 | 8 | 4 | M3 | 16 | 12 / 14 / 15 | $10^{-0.005}_{-0.012}$ | 8 | 36 | 15 | M10*P1.0 | 11 | 5.5 |
| 4.5 | 8 | 4 | M3 | 19 | 14 / 15 / 16 | $12^{-0.005}_{-0.012}$ | 10 | 36 | 15 | M12*P1.0 | 11 | 5.5 |
| 5.5 | 9.5 | 6 | M3 | 22 | 18 / 20 | $15^{-0.005}_{-0.014}$ | 12 | 47 | 20 | M15*P1.0 | 13 | 10 |
| 6.6 | 11 | 10 | M4 | 24 | 20 / 25 | $17^{-0.005}_{-0.014}$ | 15 | 53 | 23 | M17*P1.0 | 17 | 7 |
| 6.5 | 11 | 10 | M4 | 30 | 25 / 28 / 30 | $20^{-0.005}_{-0.014}$ | 17 | 62 | 25 | M20*P1.0 | 17 | 11 |
| 9 | 15 | 13 | M5 | 35 | 30 / 32 / 36 | $25^{-0.005}_{-0.014}$ | 20 | 76 | 30 | M25*P1.5 | 20 | 15 |
| 11 | 17.5 | 15 | M6 | 40 | 36 / 40 | $30^{-0.005}_{-0.015}$ | 25 | 72 | 38 | M30*P1.5 | 25 | 9 |

• Supported Side spec refer to P.0053~P.0054

## Fixed Side Economic Type | Rectangle Design | GOOAK

| Model No. | Parts No. ①③④⑥ | |
|---|---|---|
| | Material | Surface Finish |
| GOOAK□□-E□B | S50C | Black Dyed |
| GOOAK□□-E□N | | Ni-Plating |

### GOOAK10 ~ GOOAK15

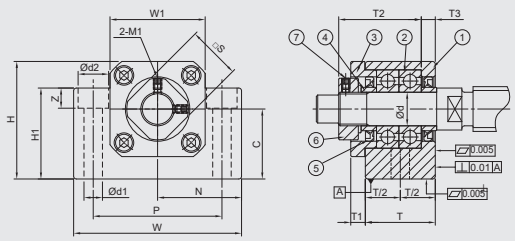


### GOOAK06 ~ GOOAK08

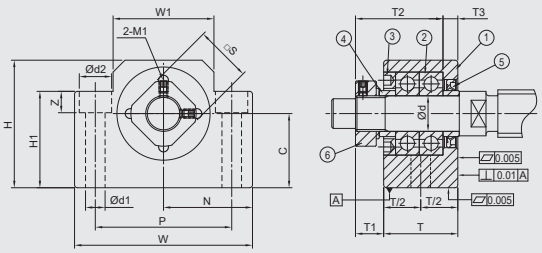


### GOOAK20

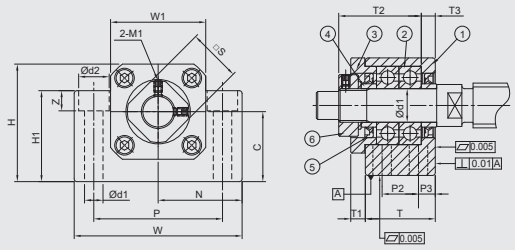


## Specification

| Economic Type | | Dimensions | | | | | | | | | | | | | | | |
|---|---|---|---|---|---|---|---|---|---|---|---|---|---|---|---|---|---|
| High Rigidity | Universal | Ød | T | T1 | T2 | T3 | W | W1 | H | H1 | N±0.02 | C$^{0}_{-0.04}$ | P | P2 | P3 | Ød1 | Ød2 |
| GOOAK06-ER□ | GOOAK06-EG□ | 6 | 20 | 5.5 | 22 | 3.5 | 42 | 18 | 25 | 20 | 21 | 13 | 30 | - | - | 5.5 | 9.5 |
| GOOAK08-ER□ | GOOAK08-EG□ | 8 | 23 | 7 | 26 | 4 | 52 | 25 | 32 | 26 | 26 | 17 | 38 | - | - | 6.6 | 11 |
| GOOAK10-ER□ | GOOAK10-EG□ | 10 | 24 | 6 | 29.5 | 6 | 70 | 36 | 43 | 35 | 35 | 25 | 52 | - | - | 8.7 | 14 |
| GOOAK12-ER□ | GOOAK12-EG□ | 12 | 24 | 6 | 29.5 | 6 | 70 | 36 | 43 | 35 | 35 | 25 | 52 | - | - | 8.7 | 14 |
| GOOAK15-ER□ | GOOAK15-EG□ | 15 | 25 | 6 | 32 | 5 | 80 | 40 | 50 | 40 | 40 | 30 | 60 | - | - | 10.7 | 17 |
| GOOAK20-ER□ | GOOAK20-EG□ | 20 | 42 | 10 | 50 | 10 | 95 | 56 | 58 | 45 | 47.5 | 30 | 75 | 22 | 10 | 10.7 | 17 |

| Ordering Example | GOOAK | - | 10 | - | ER | - | N | - | J |
|---|---|---|---|---|---|---|---|---|---|
| | Model No. | | Shaft Dia. | | Grade/Pre-loaded | | Surface finish | | Bearing category |

GOOAK-B

GOOAK-N

## Components

| No. | Parts | Material | Q´ty |
|---|---|---|---|
| ① | Main housing | S50C | 1 |
| ② | Bearing | SUJ2 | 1 pair |
| ③ | Cover | S50C | 1 |
| ④ | Space ring | S50C | 2 |
| ⑤ | Seal (<Ø8 one seal only) | NBR | 2 |
| ⑥ | Locknut | S50C | 1 |

- ①②③ are in one unit. No disassemble for accuracy concern.
- Bearing filled with proper lithium soap lubricant and sealed.

## Recommended Processing Dimensions of Shaft

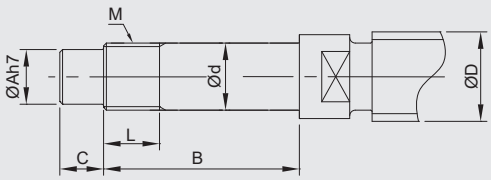


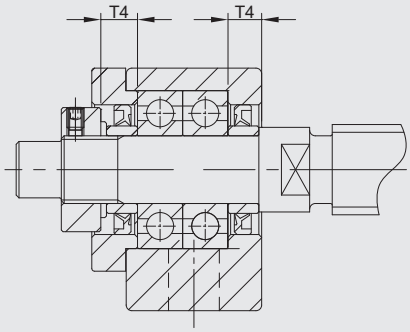


Unit：mm

| | | | Recommended Processing Dimensions of Shaft | | | | | | | |
|---|---|---|---|---|---|---|---|---|---|---|
| | | | Ball Screw Shaft O. D. | Shaft End Diameter | Processing Sizes of Shaft | | | Nominal Thread | | Space Ring Length |
| Z | M1 | □S | ØD | Ød | ØA | B | C | M | L | T4 |
| 7 | M3 | 12 | 8 / 10 | 6 $^{-0.005}_{-0.012}$ | 5 | 27 | 8 | M6*P0.75 | 6 | 5 |
| 12 | M3 | 14 | 10 / 12 | 8 $^{-0.005}_{-0.012}$ | 6.5 | 31.5 | 7.5 | M8*P1.0 | 7 | 5.5 |
| 11 | M3 | 16 | 12 / 14 / 15 | 10 $^{-0.005}_{-0.012}$ | 8 | 36 | 15 | M10*P1.0 | 11 | 5.5 |
| 11 | M3 | 19 | 14 / 15 / 16 | 12 $^{-0.005}_{-0.012}$ | 10 | 36 | 15 | M12*P1.0 | 11 | 5.5 |
| 15 | M3 | 22 | 18 / 20 | 15 $^{-0.005}_{-0.014}$ | 12 | 47 | 20 | M15*P1.0 | 13 | 6 |
| 15 | M4 | 30 | 25 / 28 / 30 | 20 $^{-0.005}_{-0.014}$ | 17 | 62 | 25 | M20*P1.0 | 17 | 11 |

• Supported Side spec refer to P.0047~P.0048

## Fixed Side Economic Type (Two-Way Mounting Design) | Rectangle Design | GOOBK

| Model No. | Parts No. ①③④⑥ | |
|---|---|---|
| | Material | Surface Finish |
| GOOBK □□ - E □B | S50C | Black Dyed |
| GOOBK □□ - E □N | | Ni-Plating |

### GOOBK-B

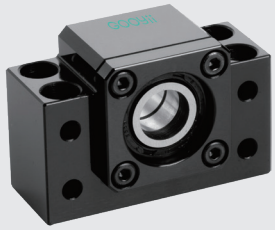

### GOOBK10 ~ GOOBK20

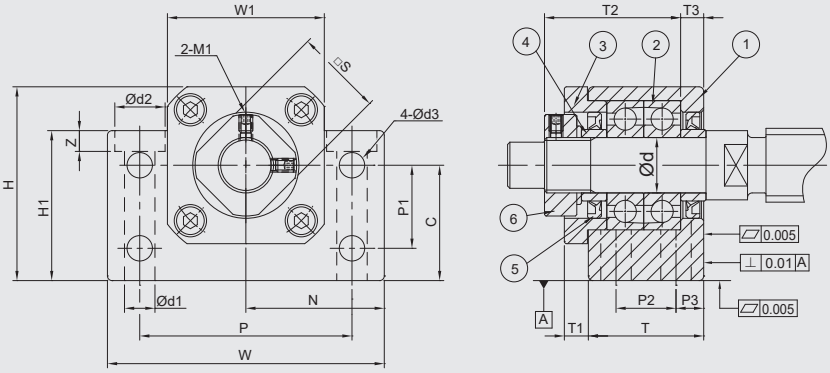


## Specification

| Economic Type | | Dimensions | | | | | | | | | | | | | | | |
|---|---|---|---|---|---|---|---|---|---|---|---|---|---|---|---|---|---|
| High Rigidity | Universal | Ød | T | T1 | T2 | T3 | W | W1 | H | H1 | N ±0.02 | C $^{0}_{-0.04}$ | P | P1 | P2 | P3 | Ød1 |
| GOOBK10-ER □ | GOOBK10-EG □ | 10 | 25 | 5 | 29.5 | 5 | 60 | 34 | 39 | 32.5 | 30 | 22 | 46 | 15 | 13 | 6 | 6.3 |
| GOOBK12-ER □ | GOOBK12-EG □ | 12 | 25 | 5 | 29.5 | 5 | 60 | 34 | 42 | 32.5 | 30 | 25 | 46 | 18 | 13 | 6 | 6.3 |
| GOOBK15-ER □ | GOOBK15-EG □ | 15 | 27 | 6 | 32 | 6 | 70 | 38 | 47 | 38 | 35 | 28 | 54 | 18 | 15 | 6 | 6.3 |
| GOOBK17-ER □ | GOOBK17-EG □ | 17 | 35 | 9 | 44 | 7 | 86 | 48 | 63 | 55 | 43 | 39 | 68 | 28 | 19 | 8 | 8.7 |
| GOOBK20-ER □ | GOOBK20-EG □ | 20 | 35 | 8 | 43 | 8 | 88 | 50 | 59 | 50 | 44 | 34 | 70 | 22 | 19 | 8 | 8.7 |

| Ordering Example | GOOBK | - | 10 | - | ER | - | N | - | J |
|---|---|---|---|---|---|---|---|---|---|
| | Model No. | | Shaft Dia. | | Grade/Pre-loaded | | Surface finish | | Bearing category |

## Fixed Side Economic Type (Two-Way Mounting Design) | Rectangle Design | GOOBK



### GOOBK-N

## Components

| No. | Parts | Material | Q´ty |
|---|---|---|---|
| ① | Main housing | S50C | 1 |
| ② | Bearing | SUJ2 | 1 pair |
| ③ | Cover | S50C | 1 |
| ④ | Space ring | S50C | 2 |
| ⑤ | Seal (<Ø8 one seal only) | NBR | 2 |
| ⑥ | Locknut | S50C | 1 |

- ①②③ are in one unit. No disassemble for accuracy concern.
- Bearing filled with proper lithium soap lubricant and sealed.

## Recommended Processing Dimensions of Shaft

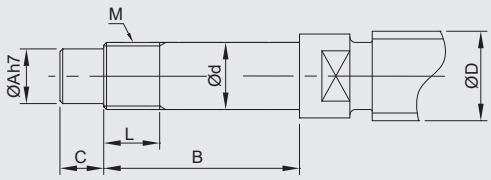


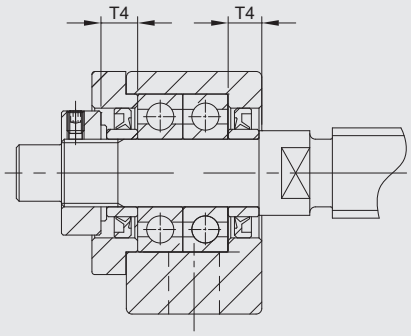


Unit：mm

| | | | | | Recommended Processing Dimensions of Shaft | | | | | | | |
|---|---|---|---|---|---|---|---|---|---|---|---|---|
| | | | | | Ball Screw Shaft O. D. | Shaft End Diameter | Processing Sizes of Shaft | | | Nominal Thread | | Space Ring Length |
| Ød2 | Z | Ød3 | M1 | □S | ØD | Ød | ØA | B | C | M | L | T4 |
| 10.5 | 6.5 | 5.5 | M3 | 16 | 12 / 14 / 15 | $10^{-0.005}_{-0.012}$ | 8 | 36 | 15 | M10*P1.0 | 16 | 5.5 |
| 10.5 | 1.5 | 5.5 | M3 | 19 | 14 / 15 / 16 | $12^{-0.005}_{-0.012}$ | 10 | 36 | 15 | M12*P1.0 | 14 | 5.5 |
| 10.5 | 6.5 | 5.5 | M3 | 22 | 18 / 20 | $15^{-0.005}_{-0.014}$ | 12 | 40 | 20 | M15*P1.0 | 12 | 6 |
| 14 | 8.6 | 6.6 | M4 | 24 | 20 / 25 | $17^{-0.005}_{-0.014}$ | 15 | 53 | 23 | M17*P1.0 | 17 | 7 |
| 14 | 8.5 | 6.6 | M4 | 30 | 25 / 28 | $20^{-0.005}_{-0.014}$ | 17 | 53 | 25 | M20*P1.0 | 15 | 8 |

- Supported Side spec refer to P.0049~P.0050

## Fixed Side Economic Type | Protruding Design | GOOEK

| Model No. | Parts No. ①③④⑥ | |
|---|---|---|
| | Material | Surface Finish |
| GOOEK□□-E□B | S50C | Black Dyed |
| GOOEK□□-E□N | | Ni-Plating |

### GOOEK-B

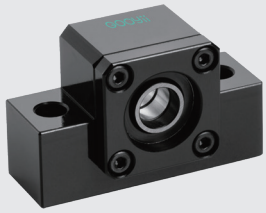

### GOOEK06 ~ GOOEK20

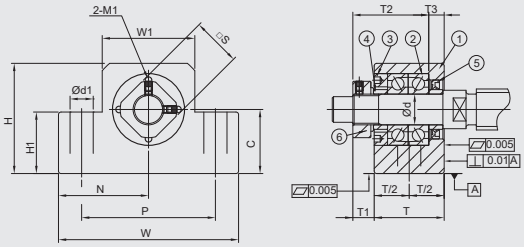


### GOOEK10 ~ GOOEK20

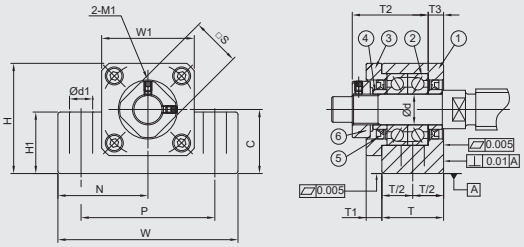


## Specification

| Economic Type | | Dimensions | | | | | | | | | | | | |
|---|---|---|---|---|---|---|---|---|---|---|---|---|---|---|
| High Rigidity | Universal | Ød | T | T1 | T2 | T3 | W | W1 | H | H1 | N ±0.02 | C $^{0}_{-0.04}$ | P | Ød1 |
| GOOEK06-ER□ | GOOEK06-EG□ | 6 | 20 | 5.5 | 22 | 3.5 | 42 | 20 | 25 | 12 | 21 | 13 | 30 | 5.2 |
| GOOEK08-ER□ | GOOEK08-EG□ | 8 | 23 | 7 | 26 | 4 | 52 | 27 | 32 | 16 | 26 | 17 | 38 | 6.3 |
| GOOEK10-ER□ | GOOEK10-EG□ | 10 | 24 | 6 | 29.5 | 6 | 70 | 36 | 43 | 24 | 35 | 25 | 52 | 9 |
| GOOEK12-ER□ | GOOEK12-EG□ | 12 | 24 | 6 | 29.5 | 6 | 70 | 36 | 43 | 24 | 35 | 25 | 52 | 9 |
| GOOEK15-ER□ | GOOEK15-EG□ | 15 | 25 | 6 | 32 | 5 | 80 | 40 | 50 | 25 | 40 | 30 | 60 | 11 |
| GOOEK20-ER□ | GOOEK20-EG□ | 20 | 42 | 10 | 50 | 10 | 95 | 56 | 58 | 25 | 47.5 | 30 | 75 | 11 |

| Ordering Example | GOOEK | - | 10 | - | ER | - | N | - | J |
|---|---|---|---|---|---|---|---|---|---|
| | Model No. | | Shaft Dia. | | Grade/Pre-loaded | | Surface finish | | Bearing category |

## Fixed Side Economic Type | Protruding Design | GOOEK



### GOOEK-N

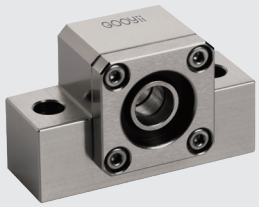

### Components

| No. | Parts | Material | Q´ty |
|---|---|---|---|
| ① | Main housing | S50C | 1 |
| ② | Bearing | SUJ2 | 1 pair |
| ③ | Cover | S50C | 1 |
| ④ | Space ring | S50C | 2 |
| ⑤ | Seal (<Ø8 one seal only) | NBR | 2 |
| ⑥ | Locknut | S50C | 1 |

- ①②③ are in one unit. No disassemble for accuracy concern.
- Bearing filled with proper lithium soap lubricant and sealed.

### Recommended Processing Dimensions of Shaft

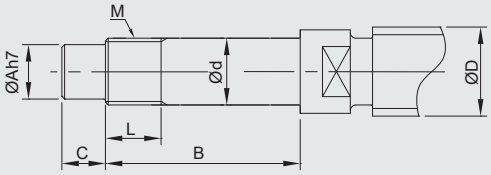


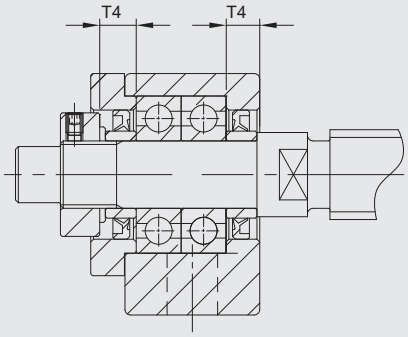


Unit：mm

| | | Recommended Processing Dimensions of Shaft | | | | | | | |
|---|---|---|---|---|---|---|---|---|---|
| | | Ball Screw Shaft O. D. | Shaft End Diameter | Processing Sizes of Shaft | | | Nominal Thread | | Space Ring Length |
| M1 | □S | ØD | Ød | ØA | B | C | M | L | T4 |
| M3 | 12 | 8 | $6^{-0.005}_{-0.012}$ | 4 | 28 | 8 | M6*P0.75 | 8 | 5 |
| M3 | 14 | 10 / 12 | $8^{-0.005}_{-0.012}$ | 6 | 32 | 9 | M8*P1.0 | 10 | 5.5 |
| M3 | 16 | 12 / 14 / 15 | $10^{-0.005}_{-0.012}$ | 8 | 36 | 15 | M10*P1.0 | 11 | 5.5 |
| M3 | 19 | 14 / 15 / 16 | $12^{-0.005}_{-0.012}$ | 10 | 36 | 15 | M12*P1.0 | 11 | 5.5 |
| M3 | 22 | 18 / 20 | $15^{-0.005}_{-0.014}$ | 12 | 47 | 20 | M15*P1.0 | 13 | 6 |
| M4 | 30 | 25 / 28 / 30 | $20^{-0.005}_{-0.014}$ | 17 | 62 | 25 | M20*P1.0 | 17 | 11 |

• Supported Side spec refer to P.0051~P.oo52

## Fixed Side Economic Type | Flange Design | GOOFK

| Model No. | Parts No. ①③④⑥ | |
|---|---|---|
| | Material | Surface Finish |
| GOOFK□□-E□B | S50C | Black Dyed |
| GOOFK□□-E□N | | Ni-Plating |

### GOOFK06 ~ GOOFK08

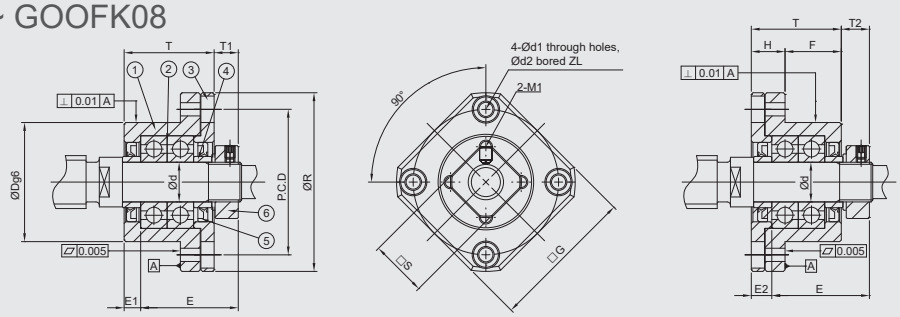


### GOOFK10 ~ GOOFK30

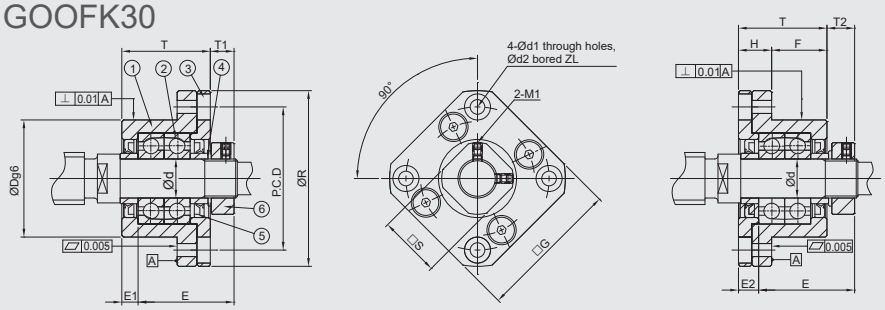


## Specification

| Economic Type | | Dimensions | | | | | | | | | | | | | |
|---|---|---|---|---|---|---|---|---|---|---|---|---|---|---|---|
| High Rigidity | Universal | Ød | ØR | □G | T | H | F | ØD $^{-0.01}_{-0.03}$ | E | Installation (A) | | Installation (B) | | PCD | Ød1 |
| | | | | | | | | | | T1 | E1 | T2 | E2 | | |
| GOOFK06-ER□ | GOOFK06-EG□ | 6 | 36 | 28 | 20 | 7 | 13 | 22 | 22 | 5.5 | 3.5 | 6.5 | 4.5 | 28 | 3.4 |
| GOOFK08-ER□ | GOOFK08-EG□ | 8 | 43 | 35 | 23 | 9 | 14 | 28 | 26 | 7 | 4 | 8 | 5 | 35 | 3.4 |
| GOOFK10-ER□ | GOOFK10-EG□ | 10 | 52 | 42 | 27 | 10 | 17 | 34 | 29.5 | 7.5 | 5 | 8.5 | 6 | 42 | 4.5 |
| GOOFK12-ER□ | GOOFK12-EG□ | 12 | 54 | 44 | 27 | 10 | 17 | 36 | 29.5 | 7.5 | 5 | 8.5 | 6 | 44 | 4.5 |
| GOOFK15-ER□ | GOOFK15-EG□ | 15 | 63 | 52 | 32 | 15 | 17 | 40 | 36 | 10 | 6 | 12 | 8 | 50 | 5.5 |
| GOOFK17-ER□ | GOOFK17-EG□ | 17 | 77 | 61 | 45 | 22 | 23 | 50 | 47 | 11 | 9 | 14 | 12 | 62 | 6.6 |
| GOOFK20-ER□ | GOOFK20-EG□ | 20 | 85 | 68 | 52 | 22 | 30 | 57 | 50 | 8 | 10 | 12 | 14 | 70 | 6.6 |
| GOOFK25-ER□ | GOOFK25-EG□ | 25 | 98 | 79 | 57 | 27 | 30 | 63 | 59 | 13 | 10 | 20 | 17 | 80 | 9 |
| GOOFK30-ER□ | GOOFK30-EG□ | 30 | 117 | 93 | 62 | 30 | 32 | 75 | 61 | 11 | 12 | 17 | 18 | 95 | 11 |

| Ordering Example | GOOFK | - | 10 | - | ER | - | N | - | J |
|---|---|---|---|---|---|---|---|---|---|
| | Model No. | | Shaft Dia. | | Grade/Pre-loaded | | Surface finish | | Bearing category |

## Fixed Side Economic Type | Flange Design | GOOFK



GOOFK-B

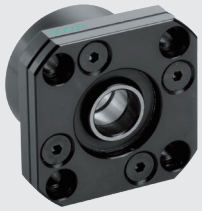

GOOFK-N

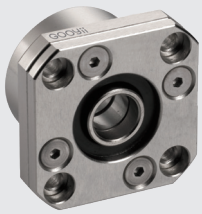

## Components

| No. | Parts | Material | Q´ty |
|---|---|---|---|
| ① | Main housing | S50C | 1 |
| ② | Bearing | SUJ2 | 1 pair |
| ③ | Cover | S50C | 1 |
| ④ | Space ring | S50C | 2 |
| ⑤ | Seal (<Ø8 one seal only) | NBR | 2 |
| ⑥ | Locknut | S50C | 1 |

- ①②③ are in one unit. No disassemble for accuracy concern.
- Bearing filled with proper lithium soap lubricant and sealed.

## Recommended Processing Dimensions of Shaft

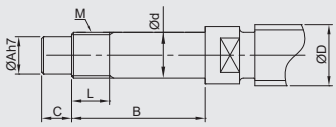


Installation(A)

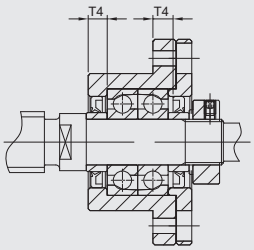


Installation(B)

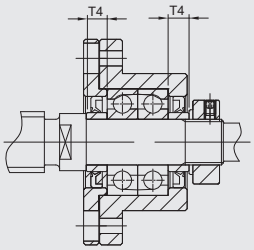


Unit：mm

| | | | | Recommended Processing Dimensions of Shaft | | | | | | | |
|---|---|---|---|---|---|---|---|---|---|---|---|
| | | | | Ball Screw Shaft O. D. | Shaft End Diameter | Processing Sizes of Shaft | | | Nominal Thread | | Space Ring Length |
| Ød2 | Z | M1 | □S | ØD | Ød | ØA | B | C | M | L | T4 |
| 6 | 3.3 | M3 | 12 | 8 | $6^{-0.005}_{-0.012}$ | 4 | 28 | 8 | M6*P0.75 | 8 | 5 |
| 6 | 3.3 | M3 | 14 | 10 / 12 | $8^{-0.005}_{-0.012}$ | 6 | 32 | 9 | M8*P1.0 | 10 | 5.5 |
| 8 | 4 | M3 | 16 | 12 / 14 / 15 | $10^{-0.005}_{-0.012}$ | 8 | 36 | 15 | M10*P1.0 | 11 | 5.5 |
| 8 | 4 | M3 | 19 | 14 / 15 / 16 | $12^{-0.005}_{-0.012}$ | 10 | 36 | 15 | M12*P1.0 | 11 | 5.5 |
| 9.5 | 6 | M3 | 22 | 18 / 20 | $15^{-0.005}_{-0.014}$ | 12 | 47 | 20 | M15*P1.0 | 13 | 10 |
| 11 | 10 | M4 | 24 | 20 / 25 | $17^{-0.005}_{-0.014}$ | 15 | 53 | 23 | M17*P1.0 | 17 | 7 |
| 11 | 10 | M4 | 30 | 25 / 28 / 30 | $20^{-0.005}_{-0.014}$ | 17 | 62 | 25 | M20*P1.0 | 17 | 11 |
| 15 | 13 | M5 | 35 | 28 / 30 / 32 | $25^{-0.005}_{-0.014}$ | 22 | 75 | 18 | M25*P1.5 | 20 | 15 |
| 17.5 | 15 | M6 | 40 | 36 / 40 | $30^{-0.005}_{-0.015}$ | 25 | 72 | 38 | M30*P1.5 | 25 | 9 |

• Supported Side spec refer to P.053~P.0054

## Support Side Standard Type | Rectangle Design | GOOAF

| Model No. | Parts No. ① | |
|---|---|---|
| | Material | Surface Finish |
| GOOAF □□ - SB | S50C | Black Dyed |
| GOOAF □□ - SN | | Ni-Plating |

GOOAF06 ~ GOOAF20

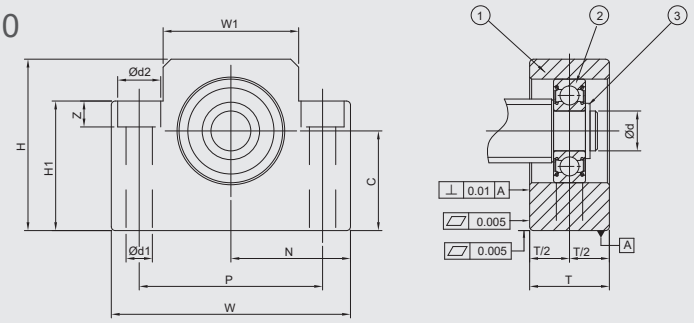


GOOAF25

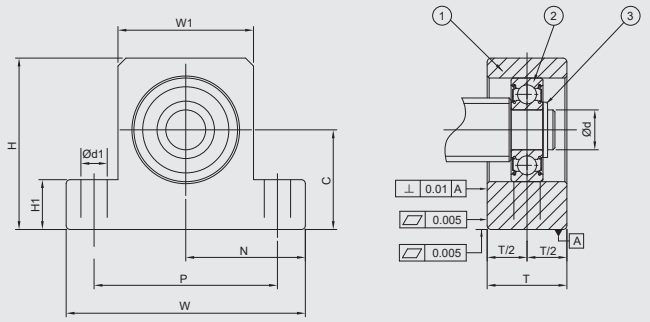


## Specification

| Standard Type | Dimensions | | | | | | | | | |
|---|---|---|---|---|---|---|---|---|---|---|
| | Ød | T | W | W1 | H | H1 | P | Ød1 | Ød2 | Z |
| GOOAF06-S □ | 6 | 12 | 42 | 18 | 25 | 20 | 30 | 5.2 | 9.5 | 7 |
| GOOAF08-S □ | 6 | 15 | 52 | 25 | 32 | 26 | 38 | 6.3 | 11 | 12 |
| GOOAF10-S □ | 8 | 20 | 70 | 36 | 43 | 35 | 52 | 8.7 | 14 | 11 |
| GOOAF12-S □ | 10 | 20 | 70 | 36 | 43 | 35 | 52 | 8.7 | 14 | 11 |
| GOOAF15-S □ | 15 | 20 | 80 | 41 | 50 | 40 | 60 | 8.7 | 14 | 11 |
| GOOAF20-S □ | 20 | 26 | 95 | 56 | 58 | 45 | 75 | 10.7 | 17 | 15 |
| GOOAF25-S □ | 25 | 30 | 105 | 66 | 68 | 25 | 85 | 11 | - | - |

| Ordering Example | GOOAF | - | 10 | - | S | - | N | - | J |
|---|---|---|---|---|---|---|---|---|---|
| | Model No. | | Shaft Dia. | | Grade | | Surface finish | | Bearing category |

## Support Side Standard Type | Rectangle Design | GOOAF



GOOAF-B

GOOAF-N

## Components

| No. | Parts | Material | Q´ty |
|---|---|---|---|
| ① | Main housing | S50C | 1 |
| ② | Bearing | SUJ2 | 1 |
| ③ | Snap ring | SWB | 1 |

- Bearing filled with proper lithium soap lubricant maintenance free.
- Bearing with two steel covers in black dyed.
- Bearing with two touch-type plistic covers in Ni-plating.

## Recommended Processing Dimensions of Shaft

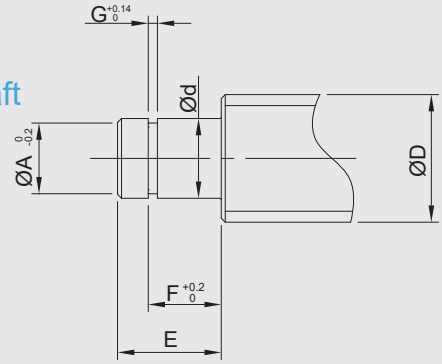


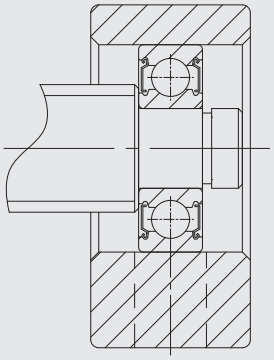

Unit：mm

| | | Recommended Processing Dimensions of Shaft | | | | | | Snap Ring |
|---|---|---|---|---|---|---|---|---|
| | | Ball Screw Shaft O. D. | Shaft End Diameter | Groove Sizes Machined for Snap Ring | | | | |
| N ±0.02 | C 0 -0.02 | ØD | Ød | ØA | E | F | G | |
| 21 | 13 | 8 | 6 -0.005 -0.012 | 6 | 9 | 6.7 | 0.8 | S 06 |
| 26 | 17 | 8 / 10 | 6 -0.005 -0.012 | 6 | 9 | 6.7 | 0.8 | S 06 |
| 35 | 25 | 12 / 14 / 15 | 8 -0.005 -0.012 | 7.6 | 10 | 7.9 | 0.9 | S 08 |
| 35 | 25 | 14 / 15 / 16 | 10 -0.005 -0.012 | 9.6 | 11 | 9.15 | 1.15 | S 10 |
| 40 | 30 | 18 / 20 | 15 -0.005 -0.014 | 14.3 | 13 | 10.15 | 1.15 | S 15 |
| 47.5 | 30 | 25 / 28 / 30 | 20 -0.005 -0.014 | 19 | 19 | 15.35 | 1.35 | S 20 |
| 52.5 | 35 | 28 / 30 / 32 | 25 -0.005 -0.014 | 25 | 21 | 16.35 | 1.35 | S 25 |

- Fixed Side standard type spec please refer to P.0031~P.0032
- Fixed Side economic type spec please refer to P.0039~P.0040

## Support Side Standard Type ( Two-Way Mounting Design)| Rectangle Design | GOOBF

| Model No. | Parts No. ① | |
|---|---|---|
| | Material | Surface Finish |
| GOOBF□□- SB | S50C | Black Dyed |
| GOOBF□□- SN | | Ni-Plating |

GOOBF-B

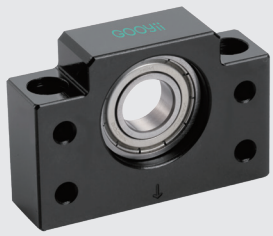

GOOBF10 ~ GOOBF40

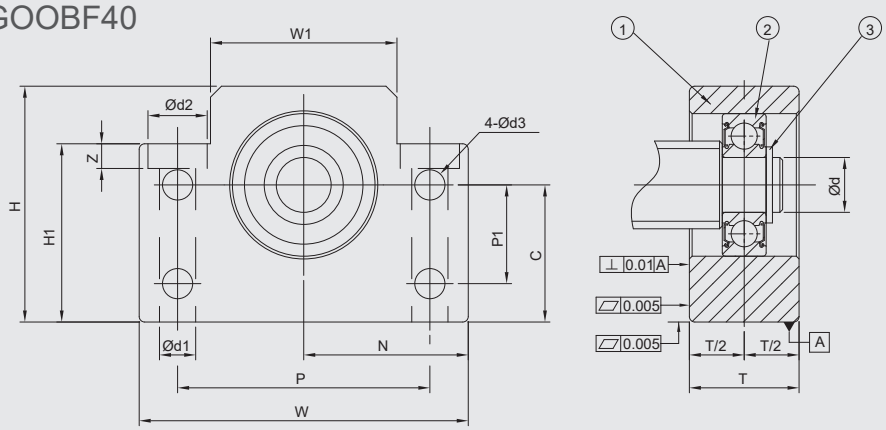


## Specification

| Standard Type | Dimensions | | | | | | | | | | | |
|---|---|---|---|---|---|---|---|---|---|---|---|---|
| | Ød | T | W | W1 | H | H1 | P | P1 | Ød1 | Ød2 | Z | Ød3 |
| GOOBF10-S □ | 8 | 20 | 60 | 34 | 39 | 32.5 | 46 | 15 | 6.3 | 10.8 | 5 | 5.5 |
| GOOBF12-S □ | 10 | 20 | 60 | 34 | 43 | 32.5 | 46 | 18 | 6.3 | 10.8 | 1.5 | 5.5 |
| GOOBF15-S □ | 15 | 20 | 70 | 40 | 48 | 38 | 54 | 18 | 6.3 | 11 | 6.5 | 5.5 |
| GOOBF17-S □ | 17 | 23 | 86 | 50 | 64 | 55 | 68 | 28 | 8.7 | 14 | 8.6 | 6.6 |
| GOOBF20-S □ | 20 | 26 | 88 | 52 | 60 | 50 | 70 | 22 | 8.7 | 14 | 8.6 | 6.6 |
| GOOBF25-S □ | 25 | 30 | 106 | 64 | 80 | 70 | 85 | 33 | 10.7 | 17.5 | 11 | 9 |
| GOOBF30-S □ | 30 | 32 | 128 | 76 | 89 | 78 | 102 | 33 | 13.7 | 20 | 13 | 11 |
| GOOBF35-S □ | 35 | 32 | 140 | 88 | 95 | 79 | 114 | 35 | 13.7 | 20 | 13 | 11 |
| GOOBF40-S □ | 40 | 37 | 160 | 100 | 109 | 90 | 130 | 37 | 17.7 | 26 | 17.5 | 14 |

| Ordering Example | GOOBF | - | 10 | - | S | - | N | - | J |
|---|---|---|---|---|---|---|---|---|---|
| | Model No. | | Shaft Dia. | | Grade | | Surface finish | | Bearing category |

## Support Side Standard Type ( Two-Way Mounting Design)| Rectangle Design | GOOBF



GOOBF-N

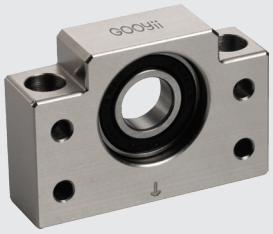

## Components

| No. | Parts | Material | Q´ty |
|---|---|---|---|
| ① | Main housing | S50C | 1 |
| ② | Bearing | SUJ2 | 1 |
| ③ | Snap ring | SWB | 1 |

- Bearing filled with proper lithium soap lubricant maintenance free.
- Bearing with two steel covers in black dyed.
- Bearing with two touch-type plistic covers in Ni-plating.

## Recommended Processing Dimensions of Shaft

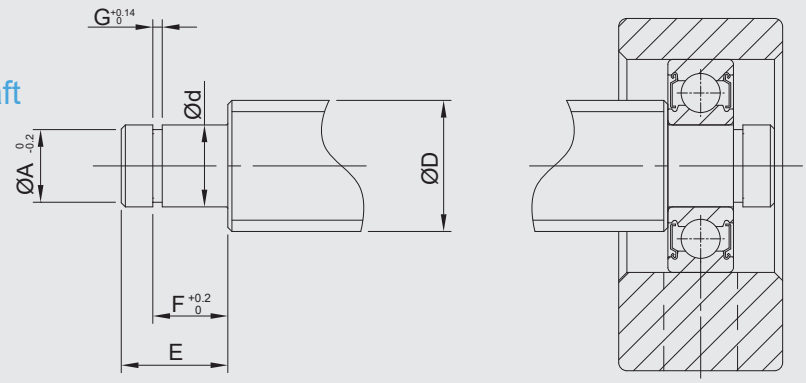


Unit：mm

| | | Recommended Processing Dimensions of Shaft | | | | | | Snap Ring |
|---|---|---|---|---|---|---|---|---|
| | | Ball Screw Shaft O. D. | Shaft End Diameter | Groove Sizes Machined for Snap Ring | | | | |
| N ±0.02 | C 0 -0.02 | ØD | Ød | ØA | E | F | G | |
| 30 | 22 | 12 / 14 / 15 | 8 -0.005 -0.012 | 7.6 | 10 | 7.9 | 0.9 | S 08 |
| 30 | 25 | 14 / 15 / 16 | 10 -0.005 -0.012 | 9.6 | 11 | 9.15 | 1.15 | S 10 |
| 35 | 28 | 18 / 20 | 15 -0.005 -0.014 | 14.3 | 13 | 10.15 | 1.15 | S 15 |
| 43 | 39 | 20 / 25 | 17 -0.005 -0.014 | 16.2 | 16 | 13.15 | 1.15 | S 17 |
| 44 | 34 | 25 / 28 / 30 | 20 -0.005 -0.014 | 19 | 19 | 13.15 | 1.35 | S 20 |
| 53 | 48 | 30 / 32 / 36 | 25 -0.005 -0.014 | 23.9 | 20 | 16.35 | 1.35 | S 25 |
| 64 | 51 | 36 / 40 | 30 -0.005 -0.015 | 28.6 | 21 | 17.75 | 1.75 | S 30 |
| 70 | 52 | 40 / 45 | 35 -0.005 -0.015 | 33 | 22 | 18.75 | 1.75 | S 35 |
| 80 | 60 | 50 | 40 -0.005 -0.015 | 38 | 23 | 19.95 | 1.95 | S 40 |

- Fixed Side standard type spec please refer to P.0033~P.0034
- Fixed Side economic type spec please refer to P.0041~P.0042

## Support Side Standard Type | Protruding Design | GOOEF

| Model No. | Parts No. ① | |
|---|---|---|
| | Material | Surface Finish |
| GOOEF □□ - SB | S50C | Black Dyed |
| GOOEF □□ - SN | | Ni-Plating |

GOOEF-B

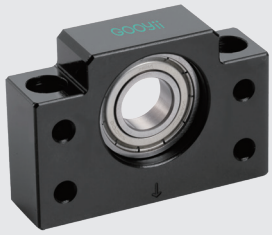

GOOEF06 ~ GOOEF20

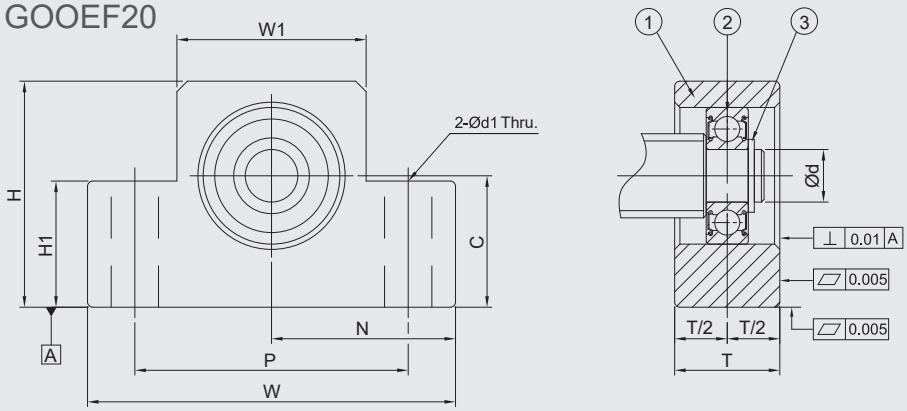


## Specification

| Standard Type | Dimensions | | | | | | | |
|---|---|---|---|---|---|---|---|---|
| | Ød | T | W | W1 | H | H1 | P | Ød1 |
| GOOEF06-S □ | 6 | 12 | 42 | 20 | 25 | 12 | 30 | 5.2 |
| GOOEF08-S □ | 6 | 14 | 52 | 27 | 32 | 16 | 38 | 6.3 |
| GOOEF10-S □ | 8 | 20 | 70 | 36 | 43 | 24 | 52 | 9 |
| GOOEF12-S □ | 10 | 20 | 70 | 36 | 43 | 24 | 52 | 9 |
| GOOEF15-S □ | 15 | 20 | 80 | 41 | 49 | 25 | 60 | 9 |
| GOOEF20-S □ | 20 | 26 | 95 | 56 | 58 | 25 | 75 | 11 |

| Ordering Example | GOOEF | - | 10 | - | S | - | N | - | J |
|---|---|---|---|---|---|---|---|---|---|
| | Model No. | | Shaft Dia. | | Grade | | Surface finish | | Bearing category |

## Support Side Standard Type | Protruding Design | GOOEF



### GOOEF-N

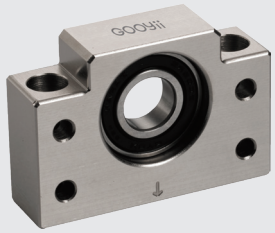


### Components

| No. | Parts | Material | Q´ty |
|---|---|---|---|
| ① | Main housing | S50C | 1 |
| ② | Bearing | SUJ2 | 1 |
| ③ | Snap ring | SWB | 1 |

- Bearing filled with proper lithium soap lubricant maintenance free.
- Bearing with two steel covers in black dyed.
- Bearing with two touch-type plistic covers in Ni-plating.

### Recommended Processing Dimensions of Shaft

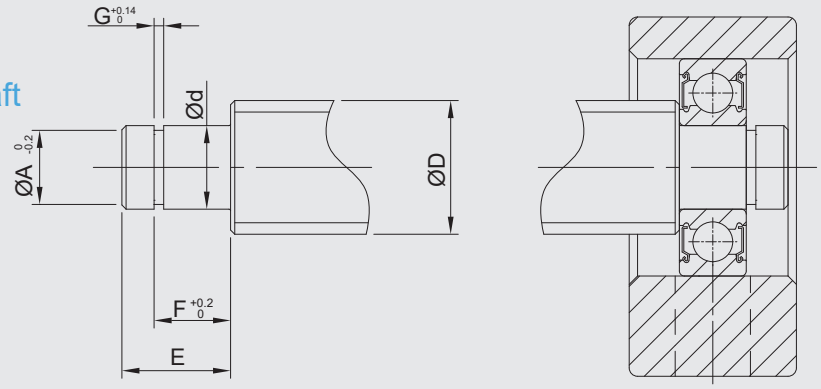


Unit：mm

| | | Recommended Processing Dimensions of Shaft | | | | | | Snap Ring |
|---|---|---|---|---|---|---|---|---|
| | | Ball Screw Shaft O. D. | Shaft End Diameter | Groove Sizes Machined for Snap Ring | | | | |
| N ±0.02 | C 0 -0.02 | ØD | Ød | ØA | E | F | G | |
| 21 | 13 | 8 | 6 -0.005 -0.012 | 5.7 | 9 | 6.8 | 0.8 | S 06 |
| 26 | 17 | 10 | 6 -0.005 -0.012 | 5.7 | 9 | 6.8 | 0.8 | S 06 |
| 35 | 25 | 12 / 14 / 15 | 8 -0.005 -0.012 | 7.6 | 10 | 7.9 | 0.9 | S 08 |
| 35 | 25 | 14 / 15 / 16 | 10 -0.005 -0.012 | 9.6 | 11 | 9.15 | 1.15 | S 10 |
| 40 | 30 | 18 / 20 | 15 -0.005 -0.014 | 14.3 | 13 | 10.15 | 1.15 | S 15 |
| 47.5 | 30 | 25 / 28 / 30 | 20 -0.005 -0.014 | 19 | 19 | 15.35 | 1.35 | S 20 |

- Fixed Side standard type spec please refer to P.0035~P.0036
- Fixed Side economic type spec please refer to P.0043~P.0044

## Support Side Standard Type | Flange Design | GOOFF

| Model No. | Parts No. ① | |
|---|---|---|
| | Material | Surface Finish |
| GOOFF □□-□ | S50C | Black Dyed |
| GOOFF □□-□ | | Ni-Plating |

GOOFF-B

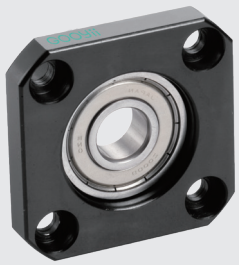

GOOFF06 ~ GOOFF30

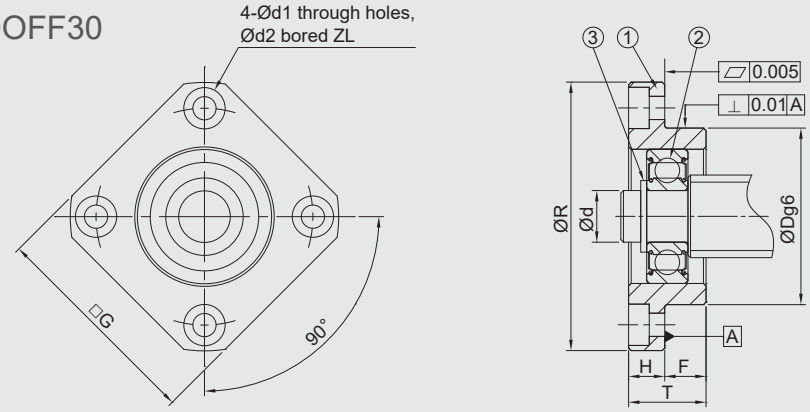


## Specification

| Standard Type | Dimensions | | | | | | | | | |
|---|---|---|---|---|---|---|---|---|---|---|
| | Ød | ØR | □G | T | H | F | $ØD^{-0.01}_{-0.03}$ | PCD | Ød1 | Ød2 |
| GOOFF06-□ | 6 | 36 | 28 | 10 | 6 | 4 | 22 | 28 | 3.4 | 6 |
| GOOFF10-□ | 8 | 43 | 35 | 12 | 7 | 5 | 28 | 35 | 3.4 | 6 |
| GOOFF12-□ | 10 | 52 | 42 | 15 | 7 | 8 | 34 | 42 | 4.2 | 8 |
| GOOFF15-□ | 15 | 63 | 52 | 17 | 9 | 8 | 40 | 50 | 5.2 | 9.5 |
| GOOFF17-□ | 17 | 77 | 61 | 20 | 11 | 9 | 50 | 62 | 6.6 | 11 |
| GOOFF20-□ | 20 | 85 | 68 | 20 | 11 | 9 | 57 | 70 | 6.6 | 11 |
| GOOFF25-□ | 25 | 98 | 79 | 24 | 14 | 10 | 63 | 80 | 8.7 | 14 |
| GOOFF30-□ | 30 | 117 | 93 | 27 | 18 | 9 | 75 | 95 | 10.7 | 17.5 |

| Ordering Example | GOOFF | - | 10 | - | N | - | J |
|---|---|---|---|---|---|---|---|
| | Model No. | | Shaft Dia. | | Surface finish | | Bearing category |

## Support Side Standard Type | Flange Design | GOOFF



### GOOFF-N

## Components

| No. | Parts | Material | Q´ty |
|---|---|---|---|
| ① | Main housing | S50C | 1 |
| ② | Bearing | SUJ2 | 1 |
| ③ | Snap ring | SWB | 1 |

- Bearing filled with proper lithium soap lubricant maintenance free.
- Bearing with two steel covers in black dyed.
- Bearing with two touch-type plistic covers in Ni-plating.

## Recommended Processing Dimensions of Shaft

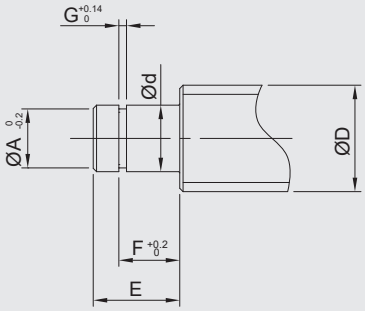


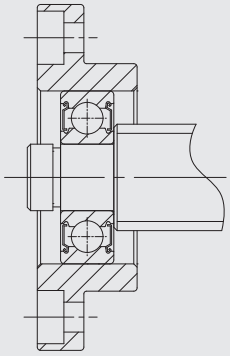

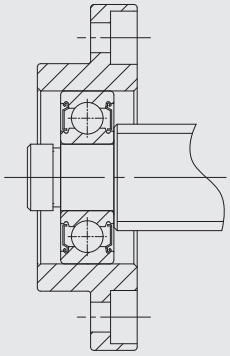

Unit：mm

| | Recommended Processing Dimensions of Shaft | | | | | | Snap Ring |
|---|---|---|---|---|---|---|---|
| | Ball Screw Shaft O. D. | Shaft End Diameter | Groove Sizes Machined for Snap Ring | | | | |
| Z | ØD | Ød | ØA | E | F | G | |
| 3.3 | 8 | $6^{-0.005}_{-0.012}$ | 5.7 | 9 | 6.8 | 0.8 | S 06 |
| 3.3 | 12 / 14 / 15 | $8^{-0.005}_{-0.012}$ | 7.6 | 10 | 7.9 | 0.9 | S 08 |
| 4.4 | 14 / 15 / 16 | $10^{-0.005}_{-0.012}$ | 9.6 | 11 | 9.15 | 1.15 | S 10 |
| 5.4 | 18 / 20 | $15^{-0.005}_{-0.014}$ | 14.3 | 13 | 10.15 | 1.15 | S 15 |
| 6.5 | 20 / 25 | $17^{-0.005}_{-0.014}$ | 16.2 | 16 | 13.15 | 1.15 | S 17 |
| 6.5 | 25 / 28 / 30 | $20^{-0.005}_{-0.014}$ | 19 | 19 | 15.35 | 1.35 | S 20 |
| 8.6 | 30 / 32 / 36 | $25^{-0.005}_{-0.014}$ | 23.9 | 20 | 16.35 | 1.35 | S 25 |
| 10.8 | 36 / 40 | $30^{-0.005}_{-0.015}$ | 28.6 | 21 | 17.75 | 1.75 | S 30 |

• Fixed Side standard type spec please refer to P.0037~P.0038
• Fixed Side economic type spec please refer to P.0045~P0046

## Fixed Side Heavy Loading | GOOWFF

### DF Assembly

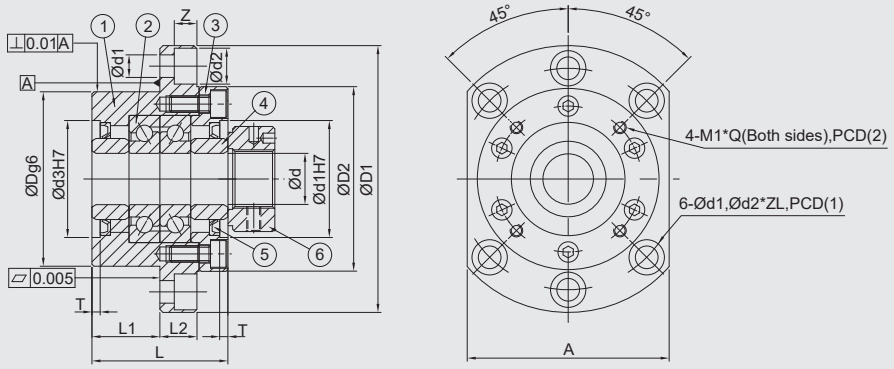


### DFD Assembly

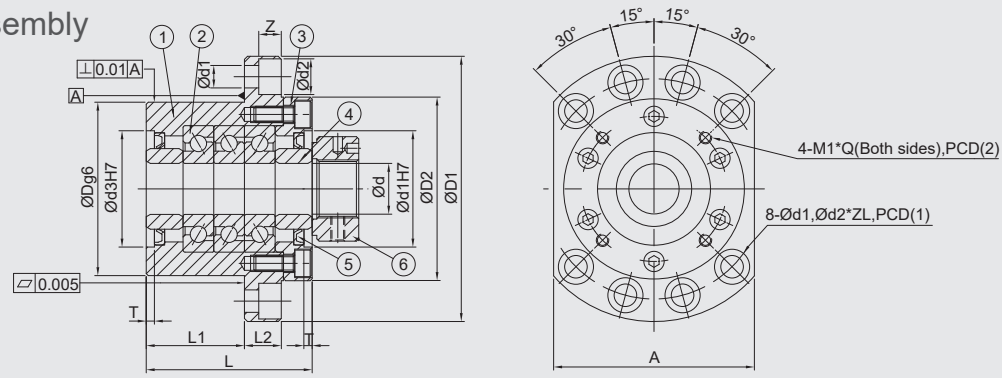


## Specification

| Model No. | | Dimensions | | | | | | | | | | | | | |
|---|---|---|---|---|---|---|---|---|---|---|---|---|---|---|---|
| Black Dyed | Ni Plating | Ød | ØD | ØD1 | ØD2 | Ød3 | L | L1 | L2 | A | PCD (1) | PCD (2) | Ød1 | Ød2 | Z |
| GOOWFF17B-DF | GWFF17N-DF | 17 | 70 | 106 | 72 | 45 | 60 | 32 | 15 | 80 | 88 | 58 | 8.7 | 14 | 8.5 |
| GOOWFF20B-DF | GWFF20N-DF | 20 | 70 | 106 | 72 | 45 | 60 | 32 | 15 | 80 | 88 | 58 | 8.7 | 14 | 8.5 |
| GOOWFF25B-DF | GWFF25N-DF | 25 | 85 | 130 | 90 | 57 | 66 | 33 | 18 | 100 | 110 | 70 | 10.7 | 17.5 | 11 |
| GOOWFF25B-DFD | GWFF25N-DFD | 25 | 85 | 130 | 90 | 57 | 81 | 48 | 18 | 100 | 110 | 70 | 10.7 | 17.5 | 11 |
| GOOWFF30B-DF | GWFF30N-DF | 30 | 85 | 130 | 90 | 57 | 66 | 33 | 18 | 100 | 110 | 70 | 10.7 | 17.5 | 11 |
| GOOWFF30B-DFD | GWFF30N-DFD | 30 | 85 | 130 | 90 | 57 | 81 | 48 | 18 | 100 | 110 | 70 | 10.7 | 17.5 | 11 |
| GOOWFF35B-DF | GWFF35N-DF | 35 | 95 | 142 | 102 | 69 | 66 | 33 | 18 | 106 | 121 | 80 | 10.7 | 17.5 | 11 |
| GOOWFF35B-DFD | GWFF35N-DFD | 35 | 95 | 142 | 102 | 69 | 81 | 48 | 18 | 106 | 121 | 80 | 10.7 | 17.5 | 11 |
| GOOWFF40B-DF | GWFF40N-DF | 40 | 95 | 142 | 102 | 69 | 66 | 33 | 18 | 106 | 121 | 80 | 10.7 | 17.5 | 11 |
| GOOWFF40B-DFD | GWFF40N-DFD | 40 | 95 | 142 | 102 | 69 | 81 | 48 | 18 | 106 | 121 | 80 | 10.7 | 17.5 | 11 |

| Ordering Example | GOOWFF | - | 20 | - | N | - | DFD | - | J |
|---|---|---|---|---|---|---|---|---|---|
| | Model No. | | Shaft Dia. | | Surface finish | | Bearing Assembly | | Bearing category |

## Fixed Side Heavy Loading | GOOWFF



GOOWFF-B-DF

GOOWFF-N-DF

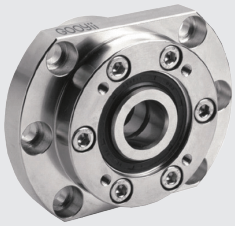

## Components

| No. | Parts | Material | Q´ty |
|---|---|---|---|
| ① | Main housing | S50C | 1 |
| ② | Bearing | SUJ2 | 1 pair |
| ③ | Cover | S50C | 1 |
| ④ | Space ring | S50C | 2 |
| ⑤ | Seal (<Ø8 one seal only) | NBR | 2 |
| ⑥ | Locknut | S50C | 1 |

- ①②③ are in one unit. No disassemble for accuracy concern.
- Bearing filled with proper lithium soap lubricant and sealed.

## Recommended Processing Dimensions of Shaft

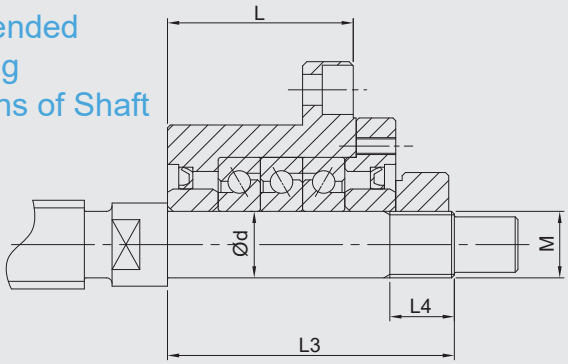


Shaft Dimensions

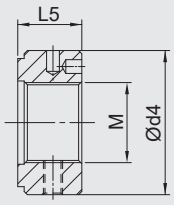


Lock Nut
Please refer to GCLN17~GCLN45

Unit：mm

| | | | Basic Dynamic Load(C) (N) | Limited Load (N) | Pre-Load (N) | Axial Rigidity (N/um) | Start Torque (N·cm) | Shaft Dimensions | | | Lock Nut | | | Weight (kg) |
|---|---|---|---|---|---|---|---|---|---|---|---|---|---|---|
| T | M1 | Q | | | | | | Ød | L3 | L4 | M | Ød4 | L5 | |
| 3 | M5 | 10 | 21900 | 26600 | 2150 | 750 | 14 | 17 | 81 | 23 | M17*P1.0 | 37 | 18 | 1.9 |
| 3 | M5 | 10 | 21900 | 26600 | 2150 | 750 | 14 | 20 | 81 | 23 | M20*P1.0 | 40 | 18 | 1.9 |
| 4 | M6 | 14 | 28500 | 40500 | 3150 | 1000 | 23 | 25 | 89 | 26 | M25*P1.5 | 45 | 20 | 3.1 |
| 4 | M6 | 14 | 46500 | 81500 | 4300 | 1470 | 31 | 25 | 104 | 26 | M25*P1.5 | 45 | 20 | 3.4 |
| 4 | M6 | 14 | 29200 | 43000 | 3350 | 1030 | 24 | 30 | 89 | 26 | M30*P1.5 | 50 | 20 | 3.0 |
| 4 | M6 | 14 | 47500 | 86000 | 4500 | 1520 | 33 | 30 | 104 | 26 | M30*P1.5 | 50 | 20 | 3.3 |
| 4 | M6 | 14 | 31000 | 50000 | 3800 | 1180 | 28 | 35 | 92 | 30 | M35*P1.5 | 55 | 22 | 3.4 |
| 4 | M6 | 14 | 50500 | 100000 | 5200 | 1710 | 37 | 35 | 107 | 30 | M35*P1.5 | 55 | 22 | 4.3 |
| 4 | M6 | 14 | 31500 | 52000 | 3900 | 1230 | 28 | 40 | 92 | 30 | M40*P1.5 | 60 | 22 | 3.6 |
| 4 | M6 | 14 | 51500 | 104000 | 5300 | 1810 | 38 | 40 | 107 | 30 | M40*P1.5 | 60 | 22 | 4.2 |

## Support Side Standard Type | Flange Design | GOOTR

| Model No. | Parts No. ① | |
|---|---|---|
| | Material | Surface Finish |
| GOOTR□□-B | S50C | Black Dyed |
| GOOTR□□-N | | Ni-Plating |

### GOOTR06 ~ GOOTR25

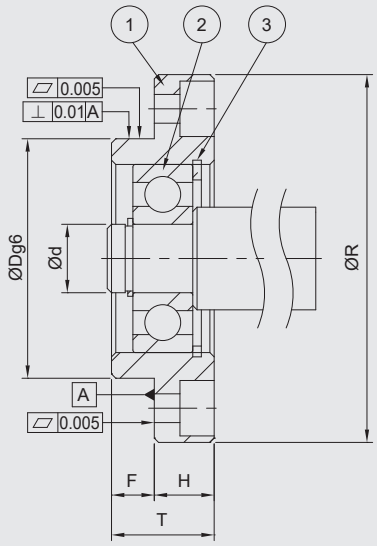


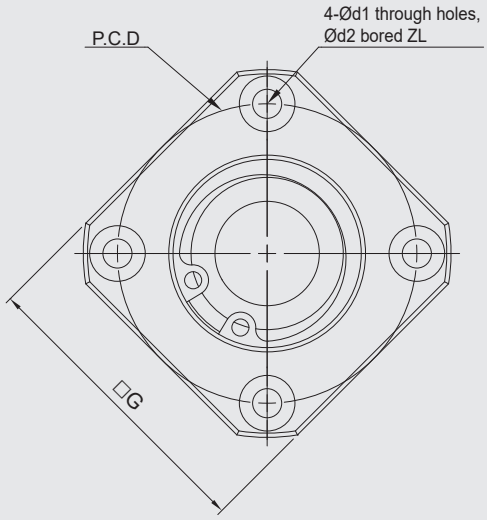


## Specification

| Standard Type | Dimensions | | | | | | | | | |
|---|---|---|---|---|---|---|---|---|---|---|
| | Ød | ØR | □G | T | H | F | ØD $^{-0.01}_{-0.03}$ | PCD | Ød1 | Ød2 |
| GOOTR06-□ | 6 | 36 | 28 | 10 | 6 | 4 | 22 | 28 | 3.4 | 6.5 |
| GOOTR10-□ | 10 | 43 | 35 | 12 | 7 | 5 | 28 | 35 | 3.4 | 6.5 |
| GOOTR12-□ | 12 | 52 | 42 | 15 | 7 | 8 | 34 | 42 | 4.5 | 8 |
| GOOTR15-□ | 15 | 63 | 52 | 17 | 9 | 8 | 40 | 50 | 5.5 | 9.5 |
| GOOTR20-□ | 20 | 85 | 68 | 20 | 11 | 9 | 57 | 70 | 6.6 | 11 |
| GOOTR25-□ | 25 | 98 | 79 | 24 | 14 | 10 | 63 | 80 | 9 | 14 |

| Ordering Example | GOOTR | - | 10 | - | N | - | J |
|---|---|---|---|---|---|---|---|
| | Model No. | | Shaft Dia. | | Surface finish | | Bearing category |

## Support Side Standard Type | Flange Design | GOOTR



GOOTR-B

GOOTR-N

## Components

| No. | Parts | Material | Q´ty |
|---|---|---|---|
| ① | Main housing | S50C | 1 |
| ② | Bearing | SUJ2 | 1 |
| ③ | Snap ring | SWB | 1 |

- Bearing filled with proper lithium soap lubricant maintenance free.
- Bearing with two steel covers in black dyed.
- Bearing with two touch-type plistic covers in Ni-plating.

## Recommended Processing Dimensions of Shaft

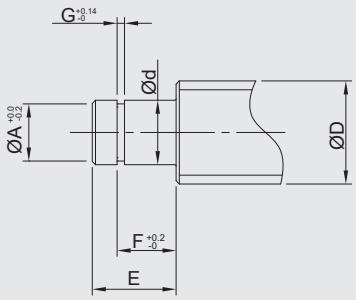


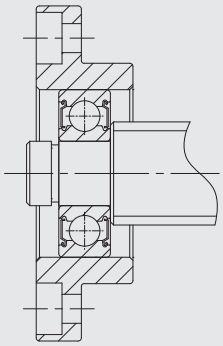

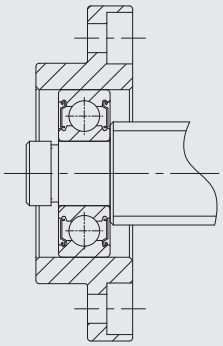

Unit：mm

| | Recommended Processing Dimensions of Shaft | | | | | | Snap Ring |
|---|---|---|---|---|---|---|---|
| | Ball Screw Shaft O. D. | Shaft End Diameter | Groove Sizes Machined for Snap Ring | | | | |
| Z | ØD | Ød | ØA | E | F | G | |
| 4 | 8 | $6^{-0.005}_{-0.012}$ | 5.7 | 9 | 6.8 | 0.8 | S 06 |
| 4 | 12 / 14 / 15 | $8^{-0.005}_{-0.012}$ | 7.6 | 10 | 7.9 | 0.9 | S 08 |
| 4 | 14 / 15 / 16 | $10^{-0.005}_{-0.012}$ | 9.6 | 11 | 9.15 | 1.15 | S 10 |
| 5.5 | 18 / 20 | $15^{-0.005}_{-0.014}$ | 14.3 | 13 | 10.15 | 1.15 | S 15 |
| 6.5 | 25 / 28 / 30 | $20^{-0.005}_{-0.014}$ | 19 | 19 | 15.35 | 1.35 | S 20 |
| 8.5 | 30 / 32 / 36 | $25^{-0.005}_{-0.014}$ | 23.9 | 20 | 16.35 | 1.35 | S 25 |

• Fixed Side spec please refer to P.0063~P.0064

# Technical Information

## Support Units

## Bearing Reference Data

# GOOYII Model Size & Bearing No.

### Fixed Side (Standard)

| GOOYII model | Size | Ball bearing no. |
|---|---|---|
| GOOAK06 | 06 | 706 |
| GOOAK08 | 08 | 708 |
| GOOAK10 | 10 | 7000 |
| GOOAK12 | 12 | 7001 |
| GOOAK15 | 15 | 7002 |
| GOOAK20 | 20 | 7204 |
| GOOAK25 | 25 | 7205 |
| | | |
| GOOBK10 | 10 | 7000 |
| GOOBK12 | 12 | 7001 |
| GOOBK15 | 15 | 7002 |
| GOOBK17 | 17 | 7203 |
| GOOBK20 | 20 | 7004 |
| GOOBK25 | 25 | 7205 |
| GOOBK30 | 30 | 7206 |
| GOOBK35 | 35 | 7207 |
| GOOBK40 | 40 | 7208 |
| | | |
| GOOEK06 | 06 | 706 |
| GOOEK08 | 08 | 708 |
| GOOEK10 | 10 | 7000 |
| GOOEK12 | 12 | 7001 |
| GOOEK15 | 15 | 7002 |
| GOOEK20 | 20 | 7204 |
| | | |
| GOOFK06 | 06 | 706 |
| GOOFK08 | 08 | 708 |
| GOOFK10 | 10 | 7000 |
| GOOFK12 | 12 | 7001 |
| GOOFK15 | 15 | 7002 |
| GOOFK17 | 17 | 7203 |
| GOOFK20 | 20 | 7204 |
| GOOFK25 | 25 | 7205 |
| GOOFK30 | 30 | 7206 |
| | | |

| GOOYII model | Size | Ball bearing no. |
|---|---|---|
| GOOSW06 | 06 | 706 |
| GOOSW08 | 08 | 708 |
| GOOSW10 | 10 | 7000 |
| GOOSW12 | 12 | 7001 |
| GOOSW15 | 15 | 7002 |
| GOOSW20 | 20 | 7204 |
| GOOSW25 | 25 | 7205 |
| | | |
| GOOSWE10 | 10 | 7000 |
| GOOSWE12 | 12 | 7001 |
| GOOSWE15 | 15 | 7002 |
| GOOSWE20 | 20 | 7204 |
| GOOSWE25 | 25 | 7205 |
| | | |
| GOORW06 | 06 | 706 |
| GOORW08 | 08 | 708 |
| GOORW10 | 10 | 7000 |
| GOORW12 | 12 | 7001 |
| GOORW15 | 15 | 7002 |
| GOORW20 | 20 | 7204 |
| GOORW25 | 25 | 7205 |
| | | |

### Fixed Side (Heavy Loading)

| GOOYII model | Size | Ball bearing no. |
|---|---|---|
| GOOWFF17 | 17 | 17TAC47B |
| GOOWFF20 | 20 | 20TAC47B |
| GOOWFF25 | 25 | 25TAC62B |
| GOOWFF30 | 30 | 30TAC62B |
| GOOWFF35 | 35 | 35TAC72B |
| GOOWFF40 | 40 | 40TAC72B |
| | | |

### Fixed Side (Economic)

| GOOYII model | Size | Ball bearing no. |
|---|---|---|
| GOOAK06 | 06 | 606 |
| GOOAK08 | 08 | 608 |
| GOOAK10 | 10 | 6000 |
| GOOAK12 | 12 | 6001 |
| GOOAK15 | 15 | 6002 |
| GOOAK20 | 20 | 6204 |
| | | |
| GOOBK10 | 10 | 6000 |
| GOOBK12 | 12 | 6001 |
| GOOBK15 | 15 | 6002 |
| GOOBK17 | 17 | 6203 |
| GOOBK20 | 20 | 6004 |
| | | |
| GOOEK06 | 06 | 606 |
| GOOEK08 | 08 | 608 |
| GOOEK10 | 10 | 6000 |
| GOOEK12 | 12 | 6001 |
| GOOEK15 | 15 | 6002 |
| GOOEK20 | 20 | 6204 |
| | | |
| GOOFK06 | 06 | 606 |
| GOOFK08 | 08 | 608 |
| GOOFK10 | 10 | 6000 |
| GOOFK12 | 12 | 6001 |
| GOOFK15 | 15 | 6002 |
| GOOFK17 | 17 | 6203 |
| GOOFK20 | 20 | 6204 |
| | | |

| GOOYII model | Size | Ball bearing no. |
|---|---|---|
| GOOSW06 | 06 | 606 |
| GOOSW08 | 08 | 608 |
| GOOSW10 | 10 | 6000 |
| GOOSW12 | 12 | 6001 |
| GOOSW15 | 15 | 6002 |
| GOOSW20 | 20 | 6204 |
| | | |
| GOOSWE10 | 10 | 6000 |
| GOOSWE12 | 12 | 6001 |
| GOOSWE15 | 15 | 6002 |
| GOOSWE20 | 20 | 6204 |
| | | |
| GOORW06 | 06 | 606 |
| GOORW08 | 08 | 608 |
| GOORW10 | 10 | 6000 |
| GOORW12 | 12 | 6001 |
| GOORW15 | 15 | 6002 |
| GOORW20 | 20 | 6204 |
| | | |
| GOORWE06 | 06 | 606 |
| GOORWE08 | 08 | 608 |
| GOORWE10 | 10 | 6000 |
| GOORWE12 | 12 | 6001 |
| GOORWE15 | 15 | 6002 |
| GOORWE20 | 20 | 6204 |
| | | |

### Support Side (Standard)

| GOOYII model | Size | Ball bearing no. |
|---|---|---|
| GOOAF06 | 06 | 606 |
| GOOAF08 | 06 | 606 |
| GOOAF10 | 08 | 608 |
| GOOAF12 | 10 | 6000 |
| GOOAF15 | 15 | 6002 |
| GOOAF20 | 20 | 6204 |
| GOOAF25 | 25 | 6205 |
| | | |
| GOOBF10 | 8 | 608 |
| GOOBF12 | 10 | 6000 |
| GOOBF15 | 15 | 6002 |
| GOOBF17 | 17 | 6203 |
| GOOBF20 | 20 | 6004 |
| GOOBF25 | 25 | 6205 |
| GOOBF30 | 30 | 6206 |
| GOOBF35 | 35 | 6207 |
| GOOBF40 | 40 | 6208 |
| | | |
| GOOEF06 | 06 | 606 |
| GOOEF08 | 06 | 606 |
| GOOEF10 | 08 | 608 |
| GOOEF12 | 10 | 6000 |
| GOOEF15 | 15 | 6002 |
| GOOEF20 | 20 | 6204 |
| | | |

| GOOYII model | Size | Ball bearing no. |
|---|---|---|
| GOOFF06 | 06 | 606 |
| GOOFF08 | 06 | 606 |
| GOOFF10 | 08 | 608 |
| GOOFF12 | 10 | 6000 |
| GOOFF15 | 15 | 6002 |
| GOOFF17 | 17 | 6203 |
| GOOFF20 | 20 | 6204 |
| GOOFF25 | 25 | 6205 |
| GOOFF30 | 30 | 6206 |
| | | |

| GOOYII model | Size | Ball bearing no. |
|---|---|---|
| GOOUN06 | 06 | 606 |
| GOOUN08 | 06 | 606 |
| GOOUN10 | 08 | 608 |
| GOOUN12 | 10 | 6000 |
| GOOUN15 | 15 | 6002 |
| GOOUN20 | 20 | 6204 |
| GOOUN25 | 25 | 6205 |
| | | |
| GOOTN06 | 06 | 606 |
| GOOTN08 | 06 | 606 |
| GOOTN10 | 08 | 608 |
| GOOTN12 | 10 | 6000 |
| GOOTN15 | 15 | 6002 |
| GOOTN20 | 20 | 6204 |
| GOOTN25 | 25 | 6205 |
| | | |

| GOOYII model | Size | Ball bearing no. |
|---|---|---|
| GOOUR06 | 06 | 606 |
| GOOUR08 | 06 | 606 |
| GOOUR10 | 08 | 608 |
| GOOUR12 | 10 | 6000 |
| GOOUR15 | 15 | 6002 |
| GOOUR20 | 20 | 6204 |
| GOOUR25 | 25 | 6205 |
| | | |
| GOOTR06 | 06 | 606 |
| GOOTR08 | 06 | 606 |
| GOOTR10 | 08 | 608 |
| GOOTR12 | 10 | 6000 |
| GOOTR15 | 15 | 6002 |
| GOOTR20 | 20 | 6204 |
| GOOTR25 | 25 | 6205 |
| | | |

## Angular Contact Ball Bearing Types

| Code | Contact Angle |
|---|---|
| C | 15° |
| AC | 25° |
| A | 30° |
| B | 40° |
| TAC | 60° |

## Angular Contact Ball Bearing Accuracy Reference

| Code | Accuracy Grade | Description |
|---|---|---|
| P2 | ★★★★★★ | ISO Grade 2 |
| P3 | ★★★★★ | Special Accuracy (Dimension Accuracy ISO Grade 4 Rotation Accuracy ISO Grade 2) |
| P4 | ★★★★ | ISO Grade 4 |
| P5 | ★★★ | ISO Grade 5 |
| P6 | ★★ | ISO Grade 6 |
| P0 | ★ | ISO Grade 0 |

## Ballscrew Grade and Recommended Bearing Reference

| Ball Screw Grade | Recommended Pre-Loaded | Recommended Ball Bearing Grade |
|---|---|---|
| C0 | Medium / Heavy Pre-Loaded | P2 ~ P3 |
| C1 | Medium / Heavy Pre-Loaded | P3 ~ P4 |
| C3 | Medium / Heavy Pre-Loaded | P4 ~ P5 |
| C5 | Light / Medium Pre-Loaded | P5, P6, P0 |
| C7 | Light Pre-Loaded | P0 |
| C7 C9 C10 | Light Pre-Loaded | Code 6 series |

Bearing Reference Data

## Angular Contact Ball Bearing Assembly Types

| Type | Number of Bearings | Description | Type | Number of Bearings | Description |
|---|---|---|---|---|---|
| DF | 2 | Face to Face | DTT | 4 | 4-in-one kit |
| DB | 2 | Back to Back | DBT | 4 | |
| DT | 2 | Parallel | DBB | 4 | |
| DBD | 3 | 3-in-one kit | DFT | 4 | |
| DTD | 3 | | DFF | 4 | |
| DFD | 3 | | | | |

## Angular Contact Ball Bearing Assembly Characters

1. GOOYII uses DF and DFD Assembly Types. All bearing assemblies are preloaded precisely to Customer's specifications before shipping. These bearing assemblies are suitable for negative clearance applications. It is not necessary to adjust the preload on customer's site.
2. DF (Face to Face) assembly is suitable for single loading direction applications due to its feature to restrain increased internal loading occurred from mis-assembly, as an advantage, however the conversed concern is its bad loading ability in the very short time.
3. DB (Back to Back) assembly is able to bear radial loading and two-direction of axial loading to produce hight rigidty in the very short time. But, the earlier peeled off problem to the bearings will be happened in case of copule situations such as failed accuracy of support unit, and mis-installation.
4. 3-in-one kit (DBD, DTD, DFD) assembly is able to bear radial and two-direction of axial loading, however, due to disproportionate pre-loaded spreaded, the single bearing is normally bear double loading compared to the other paired-bearing during high speed rotation and cause damages to the bearing. Thus, this assembly is not suggested to be applied for high-speed rotation.

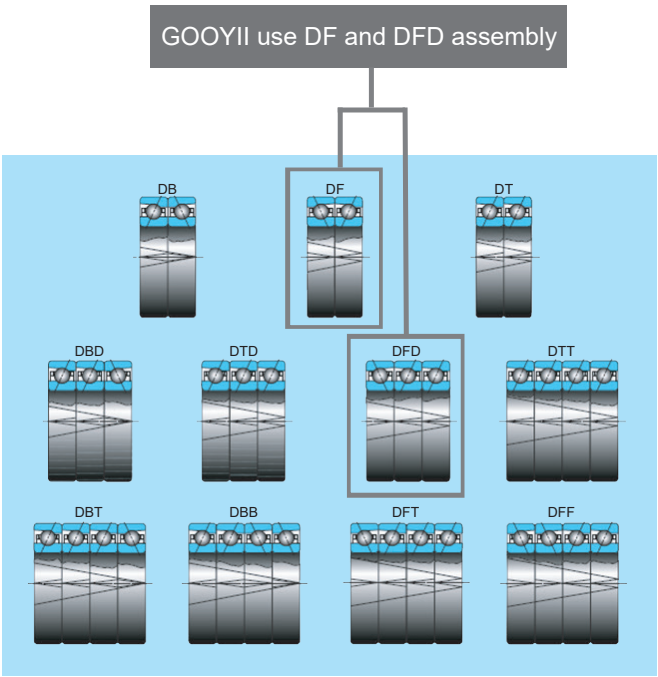

# Angular Contact Ball Bearing Applied to Fixed Side - RPM & Pre-Loaded Reference

## Japanese Series Angular Contact Ball Bearing (DF, DB Assembly) Rated RPM Reference

| Ball Bearing No. | Ball Bearing Grade | Size | Angular A (30°) Rated RPM | Angular B (40°) Rated RPM | Light Preload (L) Angular Contact A Rated RPM | Light Preload (L) Angular Contact B Rated RPM | Light Preload (M) Angular Contact A Rated RPM | Light Preload (M) Angular Contact B Rated RPM | Light Preload (H) Angular Contact A Rated RPM | Light Preload (H) Angular Contact B Rated RPM |
|---|---|---|---|---|---|---|---|---|---|---|
| 706 | P5 | 6 | 58000 | | 46400 | | 37700 | | 31900 | |
| 708 | P5 | 8 | 44000 | | 35200 | | 28600 | | 24200 | |
| 7000 | P5 | 10 | 36800 | 25300 | 29440 | 20240 | 23920 | 16445 | 20240 | 13915 |
| 7001 | P5 | 12 | 32200 | 23000 | 25760 | 18400 | 20930 | 14950 | 17710 | 12650 |
| 7002 | P5 | 15 | 27600 | 19550 | 22080 | 15640 | 17940 | 12708 | 15180 | 10753 |
| 7203 | P5 | 17 | 23000 | 16100 | 18400 | 12880 | 14950 | 10465 | 12650 | 8855 |
| 7004 | P5 | 20 | 20700 | 14950 | 16560 | 11960 | 13455 | 9718 | 11385 | 8223 |
| 7204 | P5 | 20 | 19550 | 13800 | 15640 | 11040 | 12708 | 8970 | 10753 | 7590 |
| 7205 | P5 | 25 | 17250 | 11500 | 13800 | 9200 | 11213 | 7475 | 9488 | 6325 |
| 7206 | P5 | 30 | 13800 | 9775 | 11040 | 7820 | 8970 | 6354 | 7590 | 5376 |
| 7207 | P5 | 35 | 12075 | 8050 | 9660 | 6440 | 7849 | 5233 | 6641 | 4428 |
| 7208 | P5 | 40 | 11040 | 7475 | 8832 | 5980 | 7176 | 4859 | 6072 | 4111 |

| Ball Bearing No. | Ball Bearing Grade | Size | Angular A (30°) Rated RPM | Angular B (40°) Rated RPM | Light Preload (L) Angular Contact A Rated RPM | Light Preload (L) Angular Contact B Rated RPM | Light Preload (M) Angular Contact A Rated RPM | Light Preload (M) Angular Contact B Rated RPM | Light Preload (H) Angular Contact A Rated RPM | Light Preload (H) Angular Contact B Rated RPM |
|---|---|---|---|---|---|---|---|---|---|---|
| 7000 | P0 | 10 | 32000 | 22000 | 25600 | 17600 | 20800 | 14300 | 17600 | 12100 |
| 7001 | P0 | 12 | 28000 | 20000 | 22400 | 16000 | 18200 | 13000 | 15400 | 11000 |
| 7002 | P0 | 15 | 24000 | 17000 | 19200 | 13600 | 15600 | 11050 | 13200 | 9350 |
| 7203 | P0 | 17 | 20000 | 14000 | 16000 | 11200 | 13000 | 9100 | 11000 | 7700 |
| 7004 | P0 | 20 | 18000 | 13000 | 14400 | 10400 | 11700 | 8450 | 9900 | 7150 |
| 7204 | P0 | 20 | 17000 | 12000 | 13600 | 9600 | 11050 | 7800 | 9350 | 6600 |
| 7205 | P0 | 25 | 15000 | 10000 | 12000 | 8000 | 9750 | 6500 | 8250 | 5500 |
| 7206 | P0 | 30 | 12000 | 8500 | 9600 | 6800 | 7800 | 5525 | 6600 | 4675 |
| 7207 | P0 | 35 | 10500 | 7000 | 8400 | 5600 | 6825 | 4550 | 5775 | 3850 |
| 7208 | P0 | 40 | 9600 | 6500 | 7680 | 5200 | 6240 | 4225 | 5280 | 3575 |

## Japanese Series Heavy Loading Angular Contact Ball Bearing (DF, DFD Assembly) Rated RPM Reference

| Ball Bearing No. | Size | TAC angle(60°) Rated RPM | DF Assembly / TAC Angle Rated RPM | DFD Assembly / TAC Angle Rated RPM |
|---|---|---|---|---|
| 17TAC47B | 17 | 6000 | 5100 | 4800 |
| 20TAC47B | 20 | 6000 | 5100 | 4800 |
| 25TAC62B | 25 | 4500 | 3825 | 3600 |
| 30TAC62B | 30 | 4300 | 3655 | 3440 |
| 35TAC72B | 35 | 3600 | 3060 | 2880 |
| 40TAC72B | 40 | 3600 | 3060 | 2880 |

## Taiwanese Series Angular Contact Ball Bearing (DF, DFD Assembly) Rated RPM Reference

| Ball Bearing No. | Ball Bearing Grade | Size | Angular AC(25°) Rated RPM | Angular C (15°) Rated RPM | Light Preload (L) Angular Contact AC (25°)Rated RPM | Light Preload (L) Angular Contact C (15°)Rated RPM | Light Preload (M) Angular Contact AC (25°)Rated RPM | Light Preload (M) Angular Contact C (15°)Rated RPM | Light Preload (H) Angular Contact AC (25°)Rated RPM | Light Preload (H) Angular Contact C (15°)Rated RPM |
|---|---|---|---|---|---|---|---|---|---|---|
| 708 | P5 | 08 | 31500 | 35000 | 20475 | 22750 | 17325 | 19250 | 14175 | 15750 |
| 7000 | P5 | 10 | 33500 | 30000 | 21775 | 19500 | 18425 | 16500 | 15075 | 13500 |
| 7001 | P5 | 12 | 30000 | 28000 | 19500 | 18200 | 16500 | 15400 | 13500 | 12600 |
| 7002 | P5 | 15 | 25000 | 22500 | 16250 | 14625 | 13750 | 12375 | 11250 | 10125 |
| 7203 | P5 | 17 | 20000 | 19000 | 13000 | 12350 | 11000 | 10450 | 9000 | 8550 |
| 7004 | P5 | 20 | 19000 | 17000 | 12350 | 11050 | 10450 | 9350 | 8550 | 7650 |
| 7204 | P5 | 20 | 17000 | 15000 | 11050 | 9750 | 9350 | 8250 | 7650 | 6750 |
| 7205 | P5 | 25 | 15000 | 13000 | 9750 | 8450 | 8250 | 7150 | 6750 | 5850 |
| 7206 | P5 | 30 | 12000 | 10000 | 7800 | 6500 | 6600 | 5500 | 5400 | 4500 |
| 7207 | P5 | 35 | 8500 | 9000 | 5525 | 5850 | 4675 | 4950 | 3825 | 4050 |
| 7208 | P5 | 40 | 7500 | 8500 | 4875 | 5525 | 4125 | 4675 | 3375 | 3825 |

| Ball Bearing No. | Ball Bearing Grade | Size | Angular A(30°) Rated RPM | | Light Preload (L) Angular Contact A (30°)Rated RPM | | Medium Preload (M) Angular Contact A (30°)Rated RPM | | Heavy Preload (H) Angular Contact A (30°)Rated RPM | |
|---|---|---|---|---|---|---|---|---|---|---|
| 7000 | P5 | 10 | 48200 | | 31330 | | 26510 | | 21690 | |
| 7001 | P5 | 12 | 26000 | | 16900 | | 14300 | | 11700 | |
| 7002 | P5 | 15 | 23000 | | 14950 | | 12650 | | 10350 | |

## Taiwanese Series Heavy Loading Angular Contact Ball Bearing (DF, DFD Assembly) Rated RPM Reference

| Ball Bearing No. | Size | TAC angle(60°) Rated RPM | DF Assembly / TAC Angle Rated RPM | DFD Assembly / TAC Angle Rated RPM |
|---|---|---|---|---|
| 17TAC47B | 17 | 5400 | 4590 | 4320 |
| 20TAC47B | 20 | 5400 | 4590 | 4320 |
| 25TAC62B | 25 | 4050 | 3443 | 3240 |
| 30TAC62B | 30 | 3870 | 3290 | 3096 |
| 35TAC72B | 35 | 3240 | 2754 | 2592 |
| 40TAC72B | 40 | 3240 | 2754 | 2592 |

Rated Loading Reference Data

## Basic Rated Static Load Rating Explanation

Please refer to the motor driver and ballscrew grade before choosing a proper fixed side model.

## Angular Contact Ball Bearing (DF, DB, DT Assembly) Rated Loading Reference

| Japanese Series Balling Bearing | | | | Taiwanese Series Ball Bearing | | | |
|---|---|---|---|---|---|---|---|
| Model | Contact angle | Dynamic load in KN | Static load in KN | Model | Contact angle | Dynamic load in KN | Static load in KN |
| 706A | 30° | 2.03 | 0.80 | 706A | 30° | 2.03 | 0.80 |
| 708A | 30° | 3.35 | 1.45 | 708A | 30° | 3.30 | 1.44 |
| 7000A | 30° | 5.00 | 2.34 | 7000A | 30° | 5.00 | 2.33 |
| 7001A | 30° | 5.40 | 2.71 | 7001A | 30° | 5.05 | 2.46 |
| 7002A | 30° | 5.80 | 3.15 | 7002A | 30° | 5.75 | 3.10 |
| 7203A | 30° | 10.10 | 5.45 | 7203A | 30° | 10.50 | 5.40 |
| 7004A | 30° | 10.30 | 6.10 | 7004A | 30° | 10.30 | 6.05 |
| 7204A | 30° | 13.60 | 7.55 | 7204A | 30° | 13.60 | 7.55 |
| 7205A | 30° | 15.40 | 9.45 | 7205A | 30° | 15.40 | 9.47 |
| 7206A | 30° | 21.30 | 13.60 | 7206A | 30° | 21.30 | 13.60 |
| 7207A | 30° | 28.20 | 18.50 | 7207A | 30° | 28.20 | 18.50 |
| 7208A | 30° | 33.50 | 23.30 | 7208A | 30° | 33.80 | 20.70 |

## Heany Loading Angular Bearing (DF, DB, DT Assembly) Rated Loading Reference

| Japanese Series Balling Bearing | | | | | |
|---|---|---|---|---|---|
| Model | Contact angle | Basic Dynamic Load Rating | | Axial Limit Load | |
| | | DF Axial load in KN | DFD Axial load in KN | DF Axial load in KN | DFD Axial load in KN |
| 17TAC47B | 60° | 21.9 | 35.5 | 26.6 | 53.0 |
| 20TAC47B | 60° | 21.9 | 35.5 | 26.6 | 53.0 |
| 25TAC62B | 60° | 28.5 | 46.5 | 40.5 | 81.5 |
| 30TAC62B | 60° | 29.2 | 47.5 | 43.0 | 86.0 |
| 35TAC72B | 60° | 31.0 | 50.5 | 50.0 | 100 |
| 40TAC72B | 60° | 31.5 | 51.5 | 52.0 | 104 |
| Taiwanese Series Ball Bearing | | | | | |
| Model | Contact angle | Basic Dynamic Load Rating | | Axial Limit Load | |
| | | DF Axial load in KN | DFD Axial load in KN | DF Axial load in KN | DFD Axial load in KN |
| 17TAC47B | 60° | 24.3 | 39.5 | 25.7 | 51.5 |
| 20TAC47B | 60° | 24.3 | 39.5 | 25.7 | 51.5 |
| 25TAC62B | 60° | 29.2 | 47.5 | 40 | 80.0 |
| 30TAC62B | 60° | 29.2 | 47.5 | 40 | 80.0 |
| 35TAC72B | 60° | 31.0 | 50.5 | 47.5 | 95.0 |
| 40TAC72B | 60° | 31.0 | 50.5 | 47.5 | 95.0 |

GOOYII

# Coupling

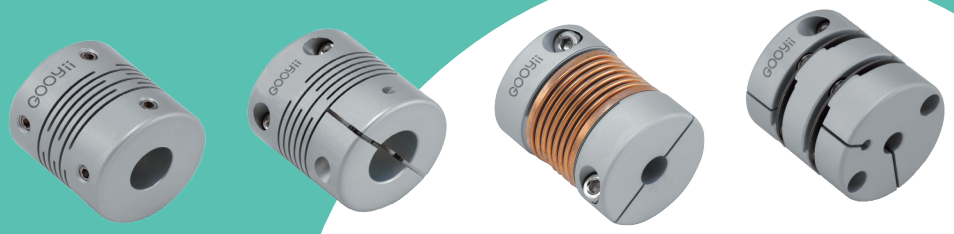

## Model No. Introduction

| F | A | C | E | | Ø40R | 10*10 | |
|---|---|---|---|---|---|---|---|
| F | A | C | H | - S | Ø32 | 6*8 | - LK |

| F | A | C | E | | Ø40R | 10*10 | Custom Made |
|---|---|---|---|---|---|---|---|
| F | A | C | H | S | Ø32 | 6*8 | LK |
| Type | Material | Axis Fixing | Coupling Model | Length | Jaw Type Coupling: Outer diameter O.D. | Jaw Type Coupling: Shaft Diameter Ød1*Ød2 | Key way |
| F: Flexible<br>R: Rigid | A: Aluminum<br>S: Stainless Steel<br>C: Carbon steel | M: Set screw fixing<br>C: Clamping fixing<br>B: 2 Pieces<br>S: Zero backlash type | S: 180 degree coupled split Spiral beam type(for servo motor)<br>M: 180 degree coupled split Spiral beam type (for stepping motor)<br>C: Metal disk with high rigid design<br>H: Metal disk in straight type<br>T: Metal disk in steps type<br>B: Bellows design<br>G: Oldham type - phosphor bronze spacer<br>P: Oldham type - carbon resin spacer<br>J: Oldham type - Black POM spacer<br>N: Oldham type - POM spacer<br>E: Jaw type<br>U: Cross Joint Type-Aluminum spacer | L: Long design<br>S: Short design | ◆Refer to dimension table to decide the O.D.<br>◆Jaw Spider options:<br>B: Blue (80 ShoreA)<br>W: White (92 ShoreA)<br>R: Red (98 ShoreA) | ◆Bore diameter of two sides of the coupling | ◆LK: left side Ød1<br>◆RK: right side Ød2<br>◆WK: Both sides (Ød1 & Ød2) |

Note：
- ◆ Material AL, surface in anodized finished.
- ◆ Accessories are clamping screws and set screws.
- ◆ Shaft dia. Ød1, Ød2 accepted by custom sizes.(Within specified Max. bore dimensions)
- ◆ GMT coupling series are all processed in cryogenic treatment.( Refer to P.0453)

## Couplings Introduction



- Coupling is a mechanism device, connecting transmission between two shafts and transmitting safety torque.
- Coupling divided into "Flexible type" and "Rigidity type".
- To apply flexible couplings timing in case of power transmission, two shafts are not easy to set in alignment, or to simplify two shafts installation. It contains shock buffer to absorb parallelism, deflection, axial displacement, deviation improvement, and improvement of traditional transmission power, so few deviation would not cause any unusual situation on bearing.  It's widly applied to current markets.
- Rigidity coupling is an unit causing non-eccentric, non-deflection, and make two connected shafts fixed in one unit. Users must do the best to have motor running and axis of load in alignment due to high requirement of concentricity, also means of axis has to be calibrated strictly; otherwise, the rotating shaft would be broken caused by mechanism fatigue, also the bearing would be thermal abrasion due to eccentric load, those were brought by continuous vibration of the axis during long term running of the motor. The advantage of rigidity coupling is to transmit transmission torque precisely.

## Coupling Selection & Character Comparison

( 1 ) Coupling is a mechanism unit used in transmitting torque and rotating angle. Each model is purposed. Please select as your requirement from the table below.
( 2 ) Take spec and hole size on the list for reference to select product you need.
( 3 ) Confirm rated torque, Max. speed and dimension of selected coupling matched with the equipment you are going to use.
( 4 ) Max. torque is double of allowable torque in coupling, and torque produced in continuous rotation shall not exceed to allowable torque.

| | Spiral Beam type | | | | | | | | | |
|---|---|---|---|---|---|---|---|---|---|---|
| Flexible Coupling | GOOFAMS | GOOFACS | GOOFAMML | GOOFAMMS | GOOFSMML | GOOFSMMS | GOOFACML | GOOFACMS | GOOFSCML | GOOFSCMS |
| | | | | | | | | | | |
| page | P.0097 | P.0098 | P.0099 | P.0100 | P.0101 | P.0102 | P.0103 | P.0105 | P.0105 | P.0106 |
| Advantages comparison: Zero Rotation Backlash | Excellent | Excellent | Excellent | Excellent | Excellent | Excellent | Excellent | Excellent | Excellent | Excellent |
| High Torque Rigidity | Excellent | Excellent | Good | Good | Good | Good | Good | Good | Good | Good |
| High Torque | Good | Good | Good | Good | Good | Good | Good | Good | Good | Good |
| Allowable Axis Deviation | | | Good | | Good | | Good | | Good | |
| Character: Flexibility | | | • | | • | | • | | • | |
| Complete Miniature | • | • | | • | | • | | • | | • |
| Stainless Steel | | | | | • | • | | | • | • |
| Constant Velocity | | | | | | | | | | |
| Screw Fixing Type | • | | • | • | • | • | | | | |
| Clamp Fixing Type | | • | | | | | • | • | • | • |
| Allowable Angular Deflection | • | • | • | • | • | • | • | • | • | • |
| Allowable Parallel Offset | • | • | • | • | • | • | • | • | • | • |
| Low Inertial Torque | • | • | • | • | • | • | • | • | • | • |
| Torque Range(N·m) | 0.5~3 | 0.5~3 | 0.1~8 | 0.1~4 | 0.2~8 | 0.2~3.5 | 0.4~8 | 0.4~4 | 0.3~8 | 0.3~3.5 |
| Product Character | ◆ Coupling slitted in aluminum or stainless steel material is as structure as spiral beam type allowable offset.<br>◆ Difference of material and beam types cause variation in transmitting torque and allowable offset.<br>◆ Due to zero backlash required in high rotation accuracy, meanwhile, position accuracy meets the same requirement. | | | | | | | | | |

| | Oldham type | | | | Jaw type (Large shaft diameter use) | | | | | Zero Backlash type(Spindle use) | |
|---|---|---|---|---|---|---|---|---|---|---|---|
| Flexible Coupling | GOOFACPL | GOOFACPS | GOOFAMN | GOOFACU | GOOFAME | GOOFAMK | GOOFACE | GOOFACK | GOOFACE | GOOFASE | GOOFCSE |
| | | | | | | | | | | | |
| Page | P.0123 | P.0124 | P.0125 | P.0126 | P.0130 | P.0131 | P.0132 | P.0133 | P.134 | P.135 | P.135 |
| Advantages comparison: Zero Rotation Backlash | | | | Good | Good | Good | Good | Good | Good | 1. Zero rotation backlash<br>2. Hight torsion<br>3. High torque<br>4. Low Inertia<br>5. High rigidity<br>6. Variation resistance<br>7. High fricition<br>8. Intergrated clamping nut for bolt assembly easily | 1. Zero rotation backlash<br>2. Hight torsion<br>3. High torque<br>4. Low Inertia<br>5. High rigidity<br>6. Variation resistance<br>7. High fricition<br>8. Intergrated clamping nut for bolt assembly easily |
| High Torque Rigidity | Good | Good | Good | Excellent | Excellent | Excellent | Excellent | Excellent | Excellent | | |
| High Torque | Excellent | Good | Good | Good | Excellent | Excellent | Excellent | Excellent | Excellent | | |
| Allowable Axis Deviation | Excellent | Excellent | Excellent | Good | Good | Good | Good | Good | Good | | |
| Vibration Absorbability | Good | Good | Good | | Good | Good | Good | Good | Good | | |
| Isolation | Excellent | Excellent | Excellent | Excellent | Excellent | Excellent | Excellent | Excellent | Excellent | | |
| Character: Flexibility | | | | | • | • | • | • | • | | |
| Complete Miniature | • | • | • | | | | | | | | |
| Screw Fixing Type | | | • | | • | • | | | | | |
| Clamp Fixing Type | • | • | | • | | | • | • | • | | |
| Key Way Type | | | | | | • | | • | • | | |
| Allowable Angular Deflection | • | • | • | • | • | • | • | • | • | | |
| Allowable Parallel Offset | • | • | • | • | • | • | • | • | • | | |
| Low Inertial Torque | • | • | • | • | • | • | • | • | • | | |
| Torque Range(N·m) | 0.7~9 | 0.2~2.8 | 0.7~9 | 0.3~6 | 0.7~17 | 4~17 | 0.7~17 | 4~17 | 60~190 | | |
| Product Character | ◆ Oldham type ◆ Few friction resistance, apply to braking system (Ex: braking mechanism, relay shfat). Light torque corresponds to larger parallel offset and angular deviation.<br>◆ Jaw type ◆ Press-in type of the PU insert; select hardness through Polyurethane to make difference of vibration absorbability technically.<br>◆ Press-in type applied in low torque makes zero backlash, and equipped with good adjustment of vibration absorbability as well. | | | | | | | | ◆ Usage temperature: -20°C ~ 90°C<br>◆ Offset of angular and axial deviation are individual allowed values. Thus, the coupling unit allowable value will be reduced in case couple reasons of axial offset appearing at the same time.<br>◆ Available to make key ways on request. Refer to P. 2 for Key way marking options. | ◆ Usage temperature: -20°C ~ 90°C<br>◆ Offset of angular and axial deviation are individual allowed values. Thus, the coupling unit allowable value will be reduced in case couple reasons of axial offset appearing at the same time.<br>◆ No rotation backlash, high accuracy clamping prestress design.<br>◆ Light aluminum shaft bushing offers small inertia.<br>◆ Tight clamping force to bring high friction moment.<br>◆ Stable rotation to perform a high linear speed 40m/s. | ◆ Usage temperature: -20°C ~ 90°C<br>◆ Offset of angular and axial deviation are individual allowed values. Thus, the coupling unit allowable value will be reduced in case couple reasons of axial offset appearing at the same time.<br>◆ No rotation backlash, high accuracy clamping prestress design.<br>◆ Tight clamping force to bring high friction moment.<br>◆ Stable rotation to perform a high linear speed 40m/s. |

## Coupling Selection & Character Comparison



| Metal Disk type | | | | | | Bellows type | | | | Oldham type | | | | | |
|---|---|---|---|---|---|---|---|---|---|---|---|---|---|---|---|
| GOOFACCL | GOOFACCS | GOOFACHL | GOOFACHS | GOOFACTL | GOOFACTS | GOOFAMB | GOOFSMB | GOOFACB | GOOFSCB | GOOFSMG | GOOFSCG | GOOFSMP | GOOFSCP | GGOOFAMJ | GOOFACJ |
| | | | | | | | | | | | | | | | |
| P.0107 | P.0108 | P.0109 | P.0110 | P.0111 | P.0112 | P.0113 | P.0114 | P.0115 | P.0116 | P.0117 | P.0118 | P.0119 | P.0120 | P.0121 | P.0122 |
| Excellent | Excellent | Excellent | Excellent | Excellent | Excellent | Excellent | Excellent | Excellent | Excellent | | | | | | |
| Excellent | Good | Excellent | Excellent | Good | Good | Good | Good | Good | Good | Excellent | Excellent | Good | Good | Good | Good |
| Good | Good | Good | Excellent | Good | Good | Good | Good | Good | Good | Excellent | Excellent | Good | Good | Good | Good |
| Good | | Good | | Good | | Good | Good | Good | Good | Excellent | Excellent | Excellent | Excellent | Excellent | Excellent |
| • | | • | | • | | | | | | | | | | | |
| | • | | • | | • | | | | | | | | | | |
| | | | | | | | • | | • | | | | | | |
| | | | | | | • | • | • | • | • | | • | | • | |
| | | | | | | • | | • | | | • | | • | | • |
| • | • | • | • | • | • | | • | | • | • | • | • | • | • | |
| • | • | • | • | • | • | • | • | • | • | • | • | • | • | • | • |
| • | • | • | • | • | • | • | • | • | • | • | • | • | • | • | • |
| • | • | • | • | • | • | • | • | • | • | • | • | • | • | • | • |
| 1.2～25 | 1.2～25 | 0.7～9 | 0.7～9 | 2～10 | 2～10 | 0.3～2 | 0.5～3 | 0.3～2 | 0.5～3 | 3~50 | 3~50 | 0.3~28 | 1.6~18 | 30~80 | 26~72 |
| ◆ Composed of body and disc, which is bended, to creat its allowable offset structure.<br>◆ Difference of body or strength & material of disc cause variation in transmitting torque and allowable offset.<br>◆ Due to zero rotation backlash required in rotation accuracy, meanwhile, position accuracy meets the same requirement.<br>◆ Widely ranges from standard to high torque change due to variable matches of dimesnions and materials for disc. | | | | | | ◆ Uniform turning with allowable offset suits for constant velocity like encoder application. | | | | ◆ Oldham type<br>◆ Jaw type | ◆ Few friction resistance, apply to braking system (Ex: braking mechanism, relay shfat). Light torque corresponds to larger parallel offset and angular deviation.<br>◆ Press-in type of the PU insert; select hardness through Polyurethane to make difference of vibration absorbability technically.<br>◆ Press-in type applied in low torque makes zero rotation backlash, and equipped with good adjustment of vibration absorbability as well. | | | | |

| Rigidity Coupling | GOORAM | GOORSM | GOORACS | GOORSCS | GOORAB | GOORSB | GOORACL | GOORSCL |
|---|---|---|---|---|---|---|---|---|
| | | | | | | | | |
| Page | P.0138 | P.0139 | P.0140 | P.0141 | P.0142 | P.0143 | P.0144 | P.0145 |
| Zero Rotation Backlash | Excellent | Excellent | Excellent | Excellent | Excellent | Excellent | Excellent | Excellent |
| High Rigidity Torque | Excellent | Excellent | Excellent | Excellent | Excellent | Excellent | Excellent | Excellent |
| High Torque | Good | Good | Good | Good | Good | Good | Good | Good |
| Stainless Steel | | • | | • | | • | | • |
| Screw Fixing Type | • | • | | | | | | |
| Clamp Fixing Type | | | • | • | • | | • | • |
| 2-Piece Type | | | | | • | • | | |
| Low Inertial Torque | • | • | • | • | • | • | • | • |
| Torque Range(N·m) | 0.3～4 | 0.3～2 | 0.3～4 | 0.3～2 | 0.3～2 | 0.3～2 | 0.3～2 | 0.3～2 |
| Product Character | ◆ Coupling having frequently powerful shaft-combination.<br>◆ Having no allowable offset applys to condition in axial side absorbing angular deviation.<br>◆ To install lock screw on coupling secures the shaft well. | | | | | | | |

## Fixing

( 1 ) There are five ways to fix coupling onto shaft as below. Please select coupling as your demand.

( 2 ) Set screw or clamping screw (hexagonal countersink screw) shall be secured by screw driver or torque wrench. Securing torque refer to product specifications.

### Set Screw Fixing

This fixing in low cost is the most traditional.
Front of screw contacting with shaft directly may cause damage or difficult disassembly.

### Clamping Fixing

Use sink screw securing to narrow the slit for clamping shaft tightly. Clamped fix and easy disassembly won't cause damage of shaft.

### Separation Fixing

Use separated bushings to fix and disassemble without moving your equipment.

### Key Way Fixing

This type is also traditonal, like set screw fixing, suits for transmission in higher torque. Prevent from parallel movement, it's usually used with set screw fixing and clamp fixing together.

### Zero Backlash Type

Zero backlash type coupling is designed to be equipped high precision clamping nut as one unit, performs high friction moment and reliable movement which is suitable for spindle transmission of the machine.

## Installation

To maintain installation completeness of all kinds of couplings, it's recommended to install as follow charts to avoid direct contact of two shafts and to have a regular run.

### Oldham Type

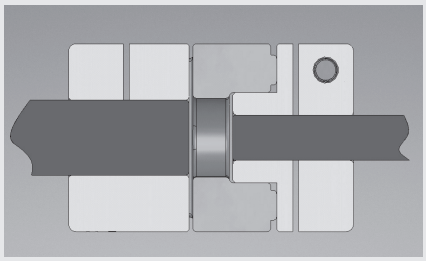

### Bellows Type

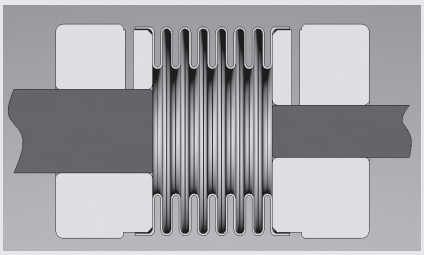

### Spiral Beam Type

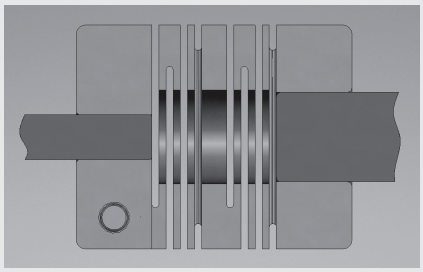

### Metal Disk Type

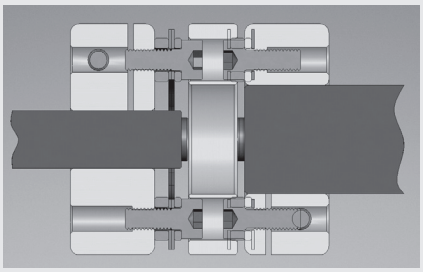

### Rigidity Coupling

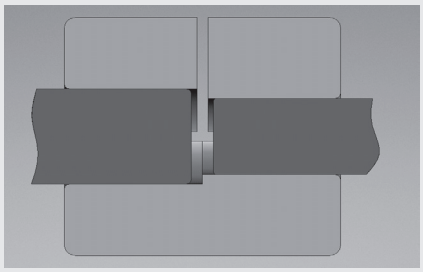

### Zero Backlash Type

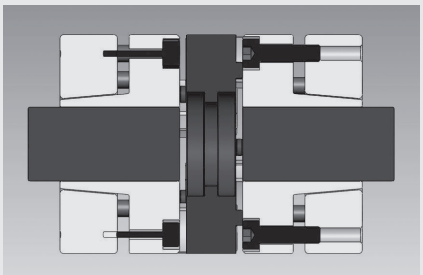

## Deviation Adjustment

### Coupling - Deviation Adjustment

( 1 ) Flexible coupling transmits torque and rotation angle, and absorb deviation from shaft installation. It may cause vibration or shortening life hours of coupling, while deviation is over allowed range. Thus, make sure and take perfect adjustment for deviaiton.

( 2 ) There are three deviation for shaft, as parallel deviation, angular deviation and axial deviation. Please adjust deviation lower than allowed range listed in the product spec offered by our catalog.

( 3 ) The max. allowable deviation listed in our catalog is in case of only one deviation existing. While two or more deviation existing at same time, allowable range shall be lower than 1/2 x max. deviation listed in the spec of catalog.

( 4 ) Deviaiton happened not only on equipment installation, but caused by vibration in running progress, heated expansion, bearing abrasion. Thus, it's recommended to adjust axial deviation lower than 1/3 x Max. range.

### Parallel Deviation

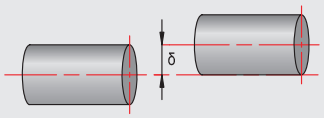


### Complex Deviation in Parallel and Angular

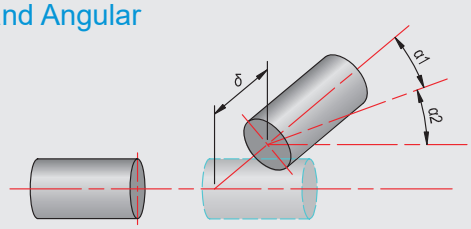


### Symmetry Angular Deviation

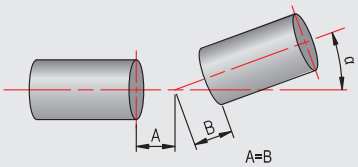


### Axial Deviation

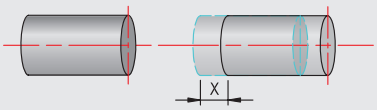


### Asymmetry Angular Deviation

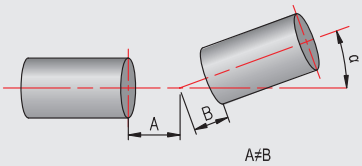


### Run Out

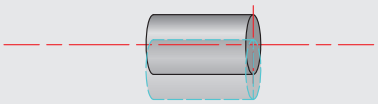

## Torque

In physics, torque is defined as "force in vertical" x "distance to rotating center", metric unit (N·m), divided by acceleration of gravity 9.8m/ $sec^2$, unit could be converted to famillar (kg-m). Imperial uint lb-ft, in case of conversion to metric unit, just take lb-ft divided by 7.22. Torque we called is not force unit, but a kind of the moment of force, which means capacity of energy transforming, We could see the connection from normal unit used in calculating torque (Kgm), and generally judging from words: Kgm stands for the capacity of rising an object weighed 1 kg in 1 meter movement. This is a kind of the moment of force, so inappropriate to call it force. Motor producing force per time unit is decided by RPM and torque of motor, and REC out shown in motor, (W) shown in Japan, (HP) power output shown in USA and Europe.
(1HP=746w=0.746kw )

## Coupling - Allowed Torque

Transmitted torque occurs in allowed speed range rotating continuously.

## Max. Torque in Driven Side

Max. torque in driven side being hitted in the moment, ex: torque produced while breaking.

## Allowable Angular (Deflection)

The deflection between two shafts while connecting two shafts.

## Allowable Axial Deviaiton Displacement

Displacement caused in axial while connecting two shafts.

## Inertial Torque

It's not easy to change running status of object with big mass (whether from static to running or running to static); equally, rotating inertial or inertial torque is to show keeping object in running status, bigger inertia torque makes tough rotation.

## Static Torsional Stiffness

Required (N·m) to rotate 1 radian.

# Motor

## Induction Motor

( 1 ) More than triple torque occurs in case of running momently.
( 2 ) Shaft axis center of the motor has ±1.5mm movement back and forth while running, and it's not recommended to use spiral beam type.
( 3 ) DC motor could be used in working environment with dust.

## Stepping Motor

( 1 ) Without triple torque in case of running momently, but max. rated torque of motor occurs.
( 2 ) Larger torque in low speed than servo motor in same level.
( 3 ) Higher RPM, smaller torque in motor.
( 4 ) Motor have temperature rise in case of running continuously. (to improve by using disk type coupling)
※Force output in stepping motor is smaller than servo motor.

## Servo Motor

( 1 ) More than triple torque occurs in case of running momently.
( 2 ) Under rated RPM range, cause rated torque.
( 3 ) Same torque produce in low speed and high speed
( 4 ) Temperature rise is small in case of running continuously.

## Encoder

( 1 ) Built-in in servo motor, has tiny driven torque.
( 2 ) Or connected to stepping motor. (optional)

## Coupling Life Calculation

( 1 ) Capacity output of driven machine：P
usage rotational speed：n
Find the torque applied to the coupling

( 2 ) Decide on the usage factor based on load conditions：K
Find the correction torque applied to the coupling：Td
Td = Ta * K° (please refer to below description)
In the case of servo motor drive

### Safety Factor

Based on Load Character Usage and Factor ：K

| Load Character | | | |
|---|---|---|---|
| steady | small change | medium change | large change |
| | | | |
| 1.0 | 1.25 | 1.75 | 2.25 |

( 3 ) Select appropriate dimensions to make coupling allowable torque：Tn
On correction torque：Td above
Tn≧Td

( 4 ) According to coupling bore dimension, there is limit condition of coupling allowable torque to be clamped by clamping force (shaft holding force).

( 5 ) Make sure that the mounting shaft is below the max. bore of coupling. In the device of periodic acutely change, in addition to the above selection, a review of torsional vibration is required.

### Ex：Servo Motor HP is 443W, Rotational Speed is n3000rpm

( 1 ) Find the torque applied to the coupling (N.m)
A：( 1 ) 443w=0.443kw
Ta=9550*0.443(kw) / 3000(rpm)=1.41(N·m)

( 2 ) Find the motor max. toque moment (N.m)
A：( 2 ) 1.41*3=4.23(N·m)

## Correction Torque Calculation

| No Plastic Spacer | Including Plastic Spacer |
|---|---|
| Correction Torque=A*B*C*D | Correction Torque=A*B*C*D / E |

★Allowed Torque≧Correction Torque

Parameter Explanation

A：Power source maximum torque (please refer to the original product manual or to the original equipment supplier)

| B：Load Character Correction Factor | C：Operation Time Correction Factor | D：Starting End Frequency Factor | E：Surrounding Environment Temperature Factor (plastic spacer) |
|---|---|---|---|
| B-1. normal 1.0 | C-1.1~2Hrs / D 0.8 | D-1.1~10回 / Hrs 1.0 | E-1.-20~30℃ 1.00 |
| B-2. medium change 1.25 | C-2.3~4Hrs / D 0.9 | D-2.11~30回 / Hrs 1.1 | E-2. 31~40℃ 0.80 |
| B-3. medium change 1.75 | C-3.5~8Hrs / D 1.0 | D-3.31~60回 / Hrs 1.3 | E-3. 41~60℃ 0.70 |
| B-4. large change 2.25 | C-4.9~16Hrs / D 1.12 | D-4.61~120回 / Hrs 1.5 | E-4. 61~100℃ 0.55 |
| | C-5.17~24Hrs / D 1.25 | D-5.121~240回 / Hrs 2.0 | |
| | | D-6.241~360回 / Hrs 3.0 | |

Rigidity Standard

## Bellows type - Rigidity Standard

### Eccentric Reaction Force

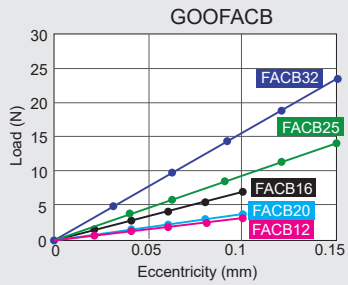


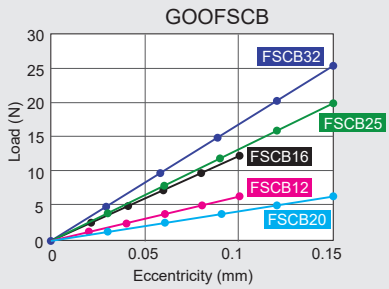


### Thrust Reaction Force

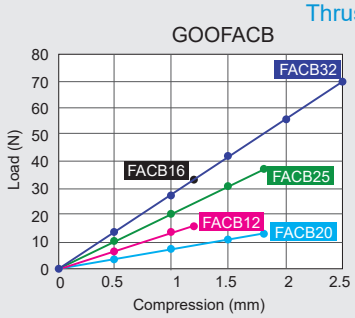


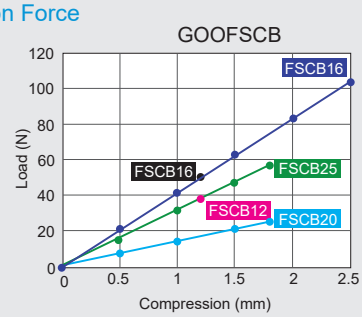


## Spiral Beam Type - Rigidity Standard

GOOFAMML

GOOFAMMS

GOOFACML

GOOFACMS

GOOFAMS

GOOFACS

Torque rigidity and flexibility -
Balance acquired among incompatible functions.
These flexible couplings apply to stepping motor.

High torque rigidity, light and complete miniature.
These flexible couplings apply to servo motor.

### Character Comparison

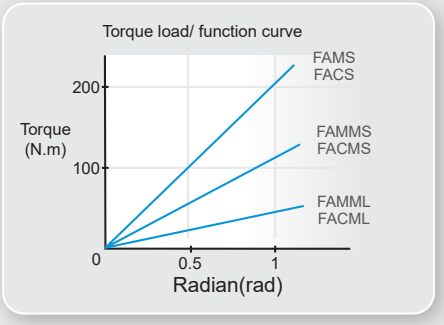


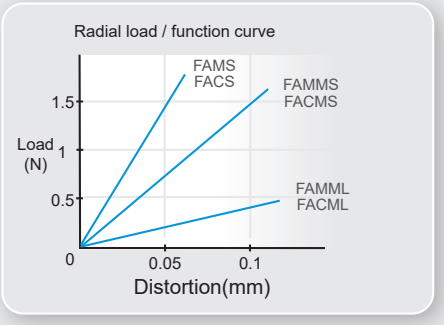

# Product Specification Couplings

## Flexible | Spiral Beam Coupling

# GOOFAMS

- Zero rotation backlash.
- The flexure allowed by the beam portion of the couping is capable of accommodating angular, parallel, and axial misalignment.
- Rotation character of clockwise or anti-clockwise are exactly the same.
- Free maintenance, oil-resist and anti-corrosiveness.
- Offset of angular, parallel, or axial deviation are individual allowed value, so couple reasons of axial offset appearing at same time would reduce the unit allowable value.

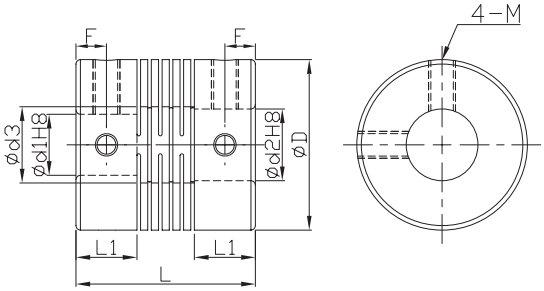


*Ød3=Ød2+0.5

| Material | Surface Finish | Accessories |
|---|---|---|
| Super Duralumin | Anodized | Nylon Set Screw |

| Dimensions | | Ød1 | Ød2 | | | | | | | | | | | | L | L1 | F | M |
|---|---|---|---|---|---|---|---|---|---|---|---|---|---|---|---|---|---|---|
| Model No. | ØD | | 5 | 6 | 6.35 | 7 | 8 | 9.525 | 10 | 11 | 12 | 14 | 15 | 16 | | | | |
| GOOFAMS | 16 | 5 | • | • | | | | | | | | | | | 17.4 | 6 | 3 | 3 |
| | | 6 | | • | | | | | | | | | | | | | | |
| | 19 | 5 | • | • | | • | • | | | | | | | | 20 | 6.8 | 3.4 | 3 |
| | | 6 | | • | • | • | • | | | | | | | | | | | |
| | | 6.35 | | | • | | • | | | | | | | | | | | |
| | | 8 | | | | | • | | • | | | | | | | | | |
| | | 10 | | | | | | | • | | | | | | | | | |
| | 24 | 6 | | • | | | • | | • | | | | | | 25 | 8.5 | 4.25 | 4 |
| | | 6.35 | | | • | | • | | • | | | | | | | | | |
| | | 7 | | | | | • | | | | | | | | | | | |
| | | 8 | | | | | • | • | • | | | | | | | | | |
| | | 9.525 | | | | | | | • | | | | | | | | | |
| | | 10 | | | | | | | • | • | • | | | | | | | |
| | | 11 | | | | | | | | | • | | | | | | | |
| | | 12 | | | | | | | | | • | | | | | | | |
| | 29 | 8 | | | | | • | | • | • | • | | | | 30 | 10.2 | 5.1 | 4 |
| | | 10 | | | | | | | • | • | • | • | | | | | | |
| | | 11 | | | | | | | | | • | • | | | | | | |
| | | 12 | | | | | | | | | • | • | | | | | | |
| | 34 | 10 | | | | | | | | | | • | | | 35 | 12 | 6 | 5 |
| | | 11 | | | | | | | | | | • | | | | | | |
| | | 12 | | | | | | | | | • | • | | • | | | | |
| | | 14 | | | | | | | | | | • | • | • | | | | |
| | | 15 | | | | | | | | | | | • | • | | | | |
| | | 16 | | | | | | | | | | | | • | | | | |

★Moment of inertial torque and weight calculated by maximum diameter.

| Specification | | Allowable Wrench Torque (N·m) | Allowable Misalignment | | | Static Torsional Stiffness (N·m/rad) | Max. RPM ($r/min^{-1}$) | ★ Moment of Inertia ($kg·m^2$) | Screw Fixing Torque (N·m) | ★ Weight (g) |
|---|---|---|---|---|---|---|---|---|---|---|
| Model No. | ØD | | Angular (°) | Parallel (mm) | Axial (mm) | | | | | |
| GOOFAMS | 16 | 0.5 | 0.5 | 0.05 | ±0.1 | 200 | 24000 | $2.8*10^{-7}$ | 0.7 | 7 |
| | 19 | 1 | | | | 270 | 20000 | $6.2*10^{-7}$ | | 10 |
| | 24 | 1.5 | | | | 790 | 16000 | $2.0*10^{-6}$ | 1.7 | 22 |
| | 29 | 2 | | | | 1400 | 13000 | $5.2*10^{-6}$ | | 40 |
| | 34 | 3 | | | | 2200 | 11000 | $1.1*10^{-5}$ | 4 | 64 |

| Ordering Example: | GOOFAMS24 | - | 8 | * | 12 | - | 100 PCS |
|---|---|---|---|---|---|---|---|
| | Model no. | | Ød1 | | Ød2 | | Q'ty |

## Flexible | Spiral Beam Coupling

# GOOFACS

- Zero rotation backlash.
- The flexure allowed by the beam portion of the coupling is capable of accommodating angular, parallel, and axial misalignment.
- Rotation character of clockwise or anti-clockwise are exactly the same.
- Free maintenance, oil-resist and anti-corrosiveness.
- Offset, deflection, shaft deviation are individual allowed value, so couple reasons of axial offset appearing at same time would reduce the unit allowable value.

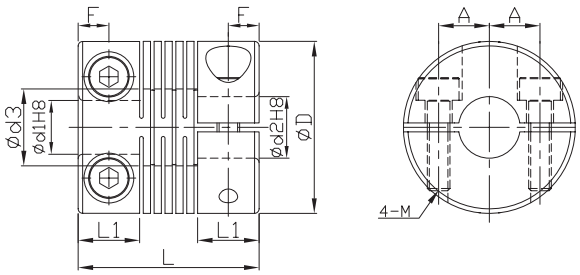


*Ød3=Ød2+0.5

| Material | Surface Finish | Accessories |
|---|---|---|
| Super Duralumin | Anodized | Hexagon Socket Screw |

| Dimensions | | Ød1 | Ød2 | | | | | | | | | | | | L | L1 | F | M | A |
|---|---|---|---|---|---|---|---|---|---|---|---|---|---|---|---|---|---|---|---|
| Model No. | ØD | | 5 | 6 | 6.35 | 7 | 8 | 9.525 | 10 | 11 | 12 | 14 | 15 | 16 | | | | | |
| GOOFACS | 16 | 5 | • | • | | | | | | | | | | | 17.4 | 6 | 3 | 2 | 4.74 |
| | | 6 | | • | | | | | | | | | | | | | | | |
| | 19 | 5 | • | • | | • | • | | | | | | | | 20 | 6.8 | 3.4 | 2.5 | 5.6 |
| | | 6 | | • | • | • | • | | | | | | | | | | | | |
| | | 6.35 | | | • | | • | | | | | | | | | | | | |
| | | 8 | | | | | • | | | | | | | | | | | | |
| | 24 | 6 | | • | | | • | | • | | | | | | 25 | 8.5 | 4.25 | 3 | 8 |
| | | 6.35 | | | • | | • | | • | | | | | | | | | | |
| | | 7 | | | | | • | | | | | | | | | | | | |
| | | 8 | | | | | • | • | • | | | | | | | | | | |
| | | 9.525 | | | | | | | • | | | | | | | | | | |
| | | 10 | | | | | | | • | | | | | | | | | | |
| | 29 | 8 | | | | | • | | • | • | • | | | | 30 | 10.2 | 5.1 | 3 | 9 |
| | | 10 | | | | | | | • | • | • | | | | | | | | |
| | | 11 | | | | | | | | | • | | | | | | | | |
| | | 12 | | | | | | | | | • | | | | | | | | |
| | 34 | 10 | | | | | | | | | | • | | | 35 | 12 | 6 | 3 | 11 |
| | | 11 | | | | | | | | | | • | | | | | | | |
| | | 12 | | | | | | | | | • | • | | • | | | | | |
| | | 14 | | | | | | | | | | • | • | • | | | | | |
| | | 15 | | | | | | | | | | | • | • | | | | | |
| | | 16 | | | | | | | | | | | | • | | | | | |

★Moment of inertial torque and weight calculated by maximum diameter.

| Specification | | Allowable Wrench Torque (N·m) | Allowable Misalignment | | | Static Torsional Stiffness (N·m/rad) | Max. RPM ($r/min^{-1}$) | ★ Moment of Inertia ($kg·m^2$) | Screw Fixing Torque (N·m) | ★ Weight (g) |
|---|---|---|---|---|---|---|---|---|---|---|
| Model No. | ØD | | Angular (°) | Parallel (mm) | Axial (mm) | | | | | |
| GOOFACS | 16 | 0.5 | 0.5 | 0.05 | ±0.1 | 200 | 9500 | $2.5*10^{-7}$ | 0.5 | 7 |
| | 19 | 1 | | | | 270 | 8000 | $5.8*10^{-7}$ | | 12 |
| | 24 | 1.5 | | | | 790 | 6300 | $1.8*10^{-6}$ | 1 | 23 |
| | 29 | 2 | | | | 1400 | 5200 | $4.7*10^{-6}$ | | 41 |
| | 34 | 3 | | | | 2200 | 4400 | $1.1*10^{-5}$ | 1.5 | 62 |

| Ordering Example: | GOOFACS24 | - | 8 | * | 12 | - | 100 PCS |
|---|---|---|---|---|---|---|---|
| | Model no. | | Ød1 | | Ød2 | | Q'ty |

## Flexible | Spiral Beam Coupling

# GOOFAMML

- Zero rotation backlash.
- The flexure allowed by the beam portion of the couping is capable of accommodating parallel, angular, and axial misalignment.
- High wrench torque rigidity and sensitivity.
- Rotation character of clockwise or anti-clockwise are exactly the same.
- Free maintenance, oil-resist and anti-corrosiveness.
- Offset of angular, parallel, or axial deviation are individual allowed value, so couple reasons of axial offset appearing at same time would reduce the unit allowable value.

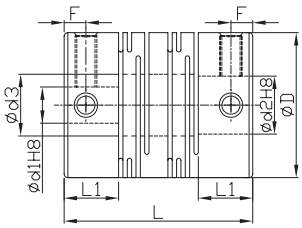


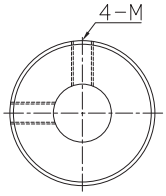


*Ød3=Ød2+0.5

*When Ød1＜4 and Ød2＞5, there would be 3 set screws.
When Ød1 and Ød2 both smaller than 4, there would be 2 set screws.

| Material | Surface Finish | Accessories |
|---|---|---|
| Super Duralumin | Anodized | Nylon Set Screw |

| Dimensions | | Ød1 | Ød2 | | | | | | | | | | | | | | | | L | L1 | M Rough thread | F |
|---|---|---|---|---|---|---|---|---|---|---|---|---|---|---|---|---|---|---|---|---|---|---|
| Model No. | ØD | | 2 | 3 | 4 | 5 | 6 | 6.35 | 7 | 8 | 9.525 | 10 | 11 | 12 | 14 | 15 | 16 | 18 | | | | |
| GOOFAMML | 8 | 2 | • | • | | | | | | | | | | | | | | | 14 | 3.5 | 2 | 1.7 |
| | | 3 | | • | | | | | | | | | | | | | | | | | | |
| | 12 | 3 | | • | • | | | | | | | | | | | | | | 18.5 | 5 | 2.5 | 2.5 |
| | | 4 | | | • | • | | | | | | | | | | | | | | | | |
| | | 5 | | | | • | • | | | | | | | | | | | | | | | |
| | 16 | 4 | | | • | • | • | | | | | | | | | | | | 23 | 6.5 | 3 | 3 |
| | | 5 | | | | • | • | | • | • | | | | | | | | | | | | |
| | | 6 | | | | | • | • | • | • | | | | | | | | | | | | |
| | | 6.35 | | | | | | | | • | | | | | | | | | | | | |
| | 20 | 5 | | | | • | • | | • | • | | | | | | | | | 26 | 7.5 | | |
| | | 6 | | | | | • | • | • | • | | • | | | | | | | | | | |
| | | 6.35 | | | | | | | | • | | | | | | | | | | | | |
| | | 8 | | | | | | | | • | • | • | | | | | | | | | | |
| | | 9.525 | | | | | | | | | | • | | | | | | | | | | |
| | | 10 | | | | | | | | | | • | | | | | | | | | | |
| | 25 | 5 | | | | | • | | | | | | | | | | | | 31 | 8.5 | 4 | 4 |
| | | 6 | | | | | • | • | | • | | • | | | | | | | | | | |
| | | 6.35 | | | | | | | | • | | • | | | | | | | | | | |
| | | 8 | | | | | | | | • | • | • | | • | | | | | | | | |
| | | 9.525 | | | | | | | | | | • | | | | | | | | | | |
| | | 10 | | | | | | | | | | • | • | • | | | | | | | | |
| | | 12 | | | | | | | | | | | | • | | | | | | | | |
| | 32 | 6 | | | | | | | | • | | | | | | | | | 41 | 12 | | 6 |
| | | 6.35 | | | | | | | | • | | | | | | | | | | | | |
| | | 8 | | | | | | | | • | • | • | | • | | | | | | | | |
| | | 9.525 | | | | | | | | | | • | | • | | | | | | | | |
| | | 10 | | | | | | | | | | • | • | • | • | | | | | | | |
| | | 12 | | | | | | | | | | | | • | • | | | | | | | |
| | | 14 | | | | | | | | | | | | | • | | • | | | | | |
| | 40 | 8 | | | | | | | | | • | | | | | | | | 56 | 17 | 5 | 8.5 |
| | | 9.525 | | | | | | | | | | • | | • | | | | | | | | |
| | | 10 | | | | | | | | | | • | | | | | | | | | | |
| | | 12 | | | | | | | | | | | | • | | | | | | | | |
| | | 14 | | | | | | | | | | | | | • | | • | • | | | | |
| | | 15 | | | | | | | | | | | | | | • | | | | | | |
| | | 16 | | | | | | | | | | | | | | | • | • | | | | |
| | | 18 | | | | | | | | | | | | | | | | • | | | | |

★Moment of inertial torque and weight calculated by maximum diameter.

| Specification | | Allowable Wrench Torque (N·m) | Allowable Misalignment | | | Static Torsional Stiffness (N·m/rad) | Max. RPM ($r/min^{-1}$) | ★ Moment of Inertia ($kg·m^2$) | Screw Fixing Torque (N·m) | ★ Weight (g) |
|---|---|---|---|---|---|---|---|---|---|---|
| Model No. | ØD | | Angular (°) | Parallel (mm) | Axial (mm) | | | | | |
| GOOFAMML | 8 | 0.1 | 2 | 0.10 | ±0.2 | 25 | 48000 | $1.2*10^{-8}$ | 0.3 | 1.4 |
| | 12 | 0.4 | | | ±0.3 | 45 | 32000 | $8.3*10^{-8}$ | 0.5 | 3.7 |
| | 16 | 0.5 | | | ±0.4 | 80 | 24000 | $3.3*10^{-7}$ | 0.7 | 8.1 |
| | 20 | 1 | | | | 170 | 19000 | $9.0*10^{-7}$ | | 14 |
| | 25 | 2 | | 0.15 | ±0.5 | 380 | 15000 | $2.6*10^{-6}$ | 1.7 | 27 |
| | 32 | 4 | | | | 500 | 12000 | $9.6*10^{-6}$ | | 60 |
| | 40 | 8 | | 0.20 | | 600 | 9600 | $3.2*10^{-5}$ | 4 | 130 |

| Ordering Example: | GOOFAMML25 | - | 10 | * | 12 | - | 100 PCS |
|---|---|---|---|---|---|---|---|
| | Model no. | | Ød1 | | Ød2 | | Q'ty |

## Flexible | Spiral Beam Coupling

# GOOFAMMS

- Zero rotation backlash.
- The flexure allowed by the beam portion of the couping is capable of accommodating angular, and axial misalignment.
- No accommodating to parallel misalignment.
- High wrench torque rigidity and sensitivity.
- Rotation character of clockwise or anti-clockwise are exactly the same.
- Free maintenance, oil-resist and anti-corrosiveness.
- FAMMS can't allow axial deviation caused by offset
- Offset of angular, parallel, or axial deviation are individual allowed value, so couple reasons of axial offset appearing at same time would reduce the unit allowable value.

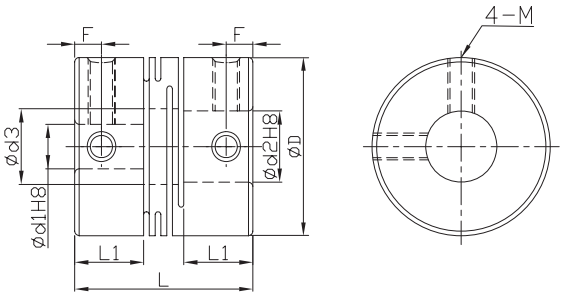


*Ød3=Ød2+0.5

⋆When Ød1＜4 and Ød2＞5, there would be 3 set screws. When Ød1 and Ød2 both smaller than 4, there would be 2 set screws.

| Material | Surface Finish | Accessories |
|---|---|---|
| Super Duralumin | Anodized | Nylon Set Screw |

| Dimensions | | Ød1 | Ød2 | | | | | | | | | | L | L1 | M Rough thread | F |
|---|---|---|---|---|---|---|---|---|---|---|---|---|---|---|---|---|
| Model No. | ØD | | 2 | 3 | 4 | 5 | 6 | 7 | 8 | 10 | 12 | 14 | | | | |
| GOOFAMMS | 8 | 2 | • | | | | | | | | | | 10 | 3.4 | 2 | 1.7 |
| | | 3 | | • | | | | | | | | | | | | |
| | 12 | 4 | | | • | • | | | | | | | 14 | 5.2 | 2.5 | 2.5 |
| | | 5 | | | | • | | | | | | | | | | |
| | 16 | 5 | | | | • | • | | | | | | 18 | 6.8 | 3 | 3 |
| | | 6 | | | | | • | | | | | | | | | |
| | 20 | 5 | | | | | • | • | • | | | | 20 | 7.65 | | |
| | | 6 | | | | | • | • | • | | | | | | | |
| | | 8 | | | | | | | • | | | | | | | |
| | 25 | 5 | | | | | • | | | | | | 25 | 9.6 | 4 | 4 |
| | | 6 | | | | | • | | • | • | | | | | | |
| | | 6.35 | | | | | | | • | • | | | | | | |
| | | 8 | | | | | | | • | • | | | | | | |
| | | 10 | | | | | | | | • | | | | | | |
| | 32 | 8 | | | | | | | • | • | | | 32 | 12.6 | | 6 |
| | | 10 | | | | | | | | • | • | | | | | |
| | | 12 | | | | | | | | | • | • | | | | |

★Moment of inertial torque and weight calculated by maximum diameter.

| Specification | | Allowable Wrench Torque (N·m) | Allowable Misalignment | | Static Torsional Stiffness (N·m/rad) | Max. RPM (r/min$^{-1}$) | ★ Moment of Inertia (kg·m$^2$) | Screw Fixing Torque (N·m) | ★ Weight (g) |
|---|---|---|---|---|---|---|---|---|---|
| Model No. | ØD | | Angular ( ° ) | Axial (mm) | | | | | |
| GOOFAMMS | 8 | 0.1 | 1 | ±0.1 | 24 | 48000 | $1.0*10^{-8}$ | 0.3 | 1 |
| | 12 | 0.4 | | | 80 | 32000 | $7.0*10^{-8}$ | 0.5 | 3.1 |
| | 16 | 0.5 | | ±0.2 | 180 | 24000 | $2.8*10^{-7}$ | 0.7 | 7.4 |
| | 20 | 1 | | | 200 | 19000 | $7.5*10^{-7}$ | | 12 |
| | 25 | 2 | | | 780 | 15000 | $2.3*10^{-6}$ | 1.7 | 24 |
| | 32 | 4 | | | 1100 | 12000 | $8.0*10^{-6}$ | | 50 |

| Ordering Example: | GOOFAMMS25 | - | 8 | * | 10 | - | 100 PCS |
|---|---|---|---|---|---|---|---|
| | Model no. | | Ød1 | | Ød2 | | Q'ty |

## Flexible | Spiral Beam Coupling

# GOOFSMML

- Zero rotation backlash.
- The flexure allowed by the beam portion of the couping is capable of accommodating parallel, angular, and axial misalignment.
- High wrench torque rigidity and sensitivity.
- Rotation character of clockwise or anti-clockwise are exactly the same.
- Free maintenance, oil-resist and anti-corrosiveness.
- Offset of angular, parallel, or axial deviation are individual allowed value, so couple reasons of axial offset appearing at same time would reduce the unit allowable value.

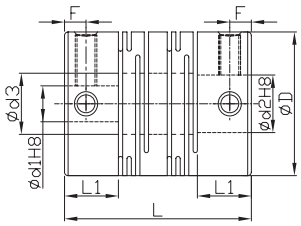


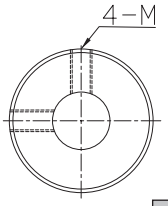


*Ød3=Ød2+0.5

*When Ød1＜4 and Ød2＞5, there would be 3 set screws.
When Ød1 and Ød2 both smaller than 4, there would be 2 set screws.

| Material | Accessories |
|---|---|
| SUS303 | Nylon Set Screw |

| Dimensions | | Ød1 | Ød2 | | | | | | | | | | | | | | | | L | L1 | M Rough thread | F |
|---|---|---|---|---|---|---|---|---|---|---|---|---|---|---|---|---|---|---|---|---|---|---|
| Model No. | ØD | | 2 | 3 | 4 | 5 | 6 | 6.35 | 7 | 8 | 9.525 | 10 | 11 | 12 | 14 | 15 | 16 | 18 | | | | |
| GOOFSMML | 8 | 2 | • | • | | | | | | | | | | | | | | | 14 | 3.5 | 2 | 1.7 |
| | | 3 | | • | | | | | | | | | | | | | | | | | | |
| | 12 | 3 | | • | • | | | | | | | | | | | | | | 18.5 | 5 | 2.5 | 2.5 |
| | | 4 | | | • | • | | | | | | | | | | | | | | | | |
| | | 5 | | | | • | • | | | | | | | | | | | | | | | |
| | 16 | 4 | | | • | • | • | | | | | | | | | | | | 23 | 6.5 | 3 | 3 |
| | | 5 | | | | • | • | | • | • | | | | | | | | | | | | |
| | | 6 | | | | | • | • | • | • | | | | | | | | | | | | |
| | | 6.35 | | | | | | | | • | | | | | | | | | | | | |
| | 20 | 5 | | | | • | • | | • | • | | | | | | | | | 26 | 7.5 | | |
| | | 6 | | | | | • | • | • | • | | • | | | | | | | | | | |
| | | 6.35 | | | | | | | | • | | | | | | | | | | | | |
| | | 8 | | | | | | | | • | • | • | | | | | | | | | | |
| | | 9.525 | | | | | | | | | | • | | | | | | | | | | |
| | | 10 | | | | | | | | | | • | | | | | | | | | | |
| | 25 | 5 | | | | | • | | | | | | | | | | | | 31 | 8.5 | 4 | 4 |
| | | 6 | | | | | • | • | | • | | • | | | | | | | | | | |
| | | 6.35 | | | | | | | | • | | • | | | | | | | | | | |
| | | 8 | | | | | | | | • | • | • | | • | | | | | | | | |
| | | 9.525 | | | | | | | | | | • | | | | | | | | | | |
| | | 10 | | | | | | | | | | • | • | • | | | | | | | | |
| | | 12 | | | | | | | | | | | | • | | | | | | | | |
| | 32 | 6 | | | | | | | | • | | | | | | | | | 41 | 12 | | 6 |
| | | 6.35 | | | | | | | | • | | | | | | | | | | | | |
| | | 8 | | | | | | | | • | • | • | | • | | | | | | | | |
| | | 9.525 | | | | | | | | | | • | | • | | | | | | | | |
| | | 10 | | | | | | | | | | • | • | • | • | | | | | | | |
| | | 12 | | | | | | | | | | | | • | • | | | | | | | |
| | | 14 | | | | | | | | | | | | | • | | • | | | | | |
| | 40 | 8 | | | | | | | | | • | | | | | | | | 56 | 17 | 5 | 8.5 |
| | | 9.525 | | | | | | | | | | • | | • | | | | | | | | |
| | | 10 | | | | | | | | | | • | | | | | | | | | | |
| | | 12 | | | | | | | | | | | | • | | | | | | | | |
| | | 14 | | | | | | | | | | | | | • | | • | • | | | | |
| | | 15 | | | | | | | | | | | | | | • | | | | | | |
| | | 16 | | | | | | | | | | | | | | | • | • | | | | |
| | | 18 | | | | | | | | | | | | | | | | • | | | | |

★Moment of inertial torque and weight calculated by maximum diameter.

| Specification | | Allowable Wrench Torque (N·m) | Allowable Misalignment | | | Static Torsional Stiffness (N·m/rad) | Max. RPM ($r/min^{-1}$) | ★ Moment of Inertia ($kg·m^2$) | Screw Fixing Torque (N·m) | ★ Weight (g) |
|---|---|---|---|---|---|---|---|---|---|---|
| Model No. | ØD | | Angular (°) | Parallel (mm) | Axial (mm) | | | | | |
| GOOFSMML | 8 | 0.2 | 2 | 0.10 | ±0.2 | 50 | 48000 | $3.1*10^{-8}$ | 0.3 | 3 |
| | 12 | 0.3 | | | ±0.3 | 64 | 32000 | $2.1*10^{-7}$ | 0.5 | 9.3 |
| | 16 | 0.5 | | | | 85 | 24000 | $8.4*10^{-7}$ | 0.7 | 21 |
| | 20 | 1 | | | | 250 | 19000 | $2.4*10^{-6}$ | | 38 |
| | 25 | 2 | | 0.15 | ±0.4 | 330 | 15000 | $6.8*10^{-6}$ | 1.7 | 71 |
| | 32 | 3.5 | | | ±0.5 | 850 | 12000 | $2.6*10^{-5}$ | | 160 |
| | 40 | 8 | | 0.20 | | 1000 | 9600 | $9.7*10^{-5}$ | 4 | 350 |

| Ordering Example: | GOOFSMML25 | - | 8 | * | 10 | - | 100 PCS |
|---|---|---|---|---|---|---|---|
| | Model no. | | Ød1 | | Ød2 | | Q'ty |

## Flexible | Spiral Beam Coupling

# GOOFSMMS

- Zero rotation backlash.
- The flexure allowed by the beam portion of the couping is capable of accommodating angular, and axial misalignment.
- No accommodating to parallel misalignment.
- High wrench torque rigidity and sensitivity.
- Rotation character of clockwise or anti-clockwise are exactly the same.
- Free maintenance, oil-resist and anti-corrosiveness.
- FSMMS can't allow axial deviation caused by offset
- Offset of angular, parallel, or axial deviation are individual allowed value, so couple reasons of axial offset appearing at same time would reduce the unit allowable value.

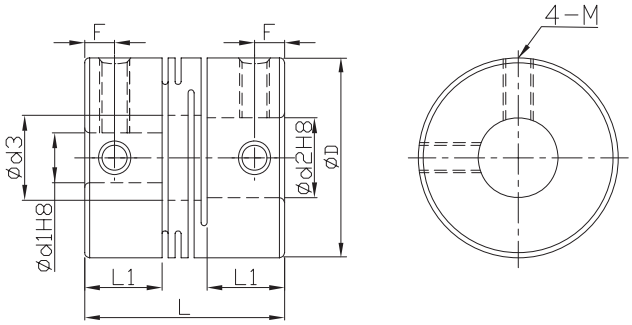


*Ød3=Ød2+0.5

⋆When Ød1＜4 and Ød2＞5, there would be 3 set screws. When Ød1 and Ød2 both smaller than 4, there would be 2 set screws.

| Material | Accessories |
|---|---|
| SUS303 | Nylon Set Screw |

| Dimensions | | Ød1 | Ød2 | | | | | | | | | | L | L1 | M Rough thread | F |
|---|---|---|---|---|---|---|---|---|---|---|---|---|---|---|---|---|
| Model No. | ØD | | 2 | 3 | 4 | 5 | 6 | 7 | 8 | 10 | 12 | 14 | | | | |
| GOOFSMMS | 8 | 2 | • | | | | | | | | | | 10 | 3.4 | 2 | 1.7 |
| | | 3 | | • | | | | | | | | | | | | |
| | 12 | 4 | | | • | • | | | | | | | 14 | 5.2 | 2.5 | 2.5 |
| | | 5 | | | | • | | | | | | | | | | |
| | 16 | 5 | | | | • | • | | | | | | 18 | 6.8 | 3 | 3 |
| | | 6 | | | | | • | | | | | | | | | |
| | 20 | 5 | | | | | • | • | • | | | | 20 | 7.65 | | |
| | | 6 | | | | | • | • | • | | | | | | | |
| | | 8 | | | | | | | • | | | | | | | |
| | 25 | 5 | | | | | • | | | | | | 25 | 9.6 | 4 | 4 |
| | | 6 | | | | | • | | • | • | | | | | | |
| | | 6.35 | | | | | | | • | • | | | | | | |
| | | 8 | | | | | | | • | • | | | | | | |
| | | 10 | | | | | | | | • | | | | | | |
| | 32 | 8 | | | | | | | • | • | | | 32 | 12.6 | | 6 |
| | | 10 | | | | | | | | • | • | | | | | |
| | | 12 | | | | | | | | | • | • | | | | |

★Moment of inertial torque and weight calculated by maximum diameter.

| Specification | | Allowable Wrench Torque (N·m) | Allowable Misalignment | | Static Torsional Stiffness (N·m/rad) | Max. RPM ($r/min^{-1}$) | ★ Moment of Inertia ($kg·m^2$) | Screw Fixing Torque (N·m) | ★ Weight (g) |
|---|---|---|---|---|---|---|---|---|---|
| Model No. | ØD | | Angular (°) | Axial (mm) | | | | | |
| GOOFSMMS | 8 | 0.2 | 1 | ±0.1 | 49 | 48000 | $2.4*10^{-8}$ | 0.3 | 2.7 |
| | 12 | 0.3 | | | 140 | 32000 | $1.8*10^{-7}$ | 0.5 | 7.8 |
| | 16 | 0.5 | | | 240 | 24000 | $7.2*10^{-7}$ | 0.7 | 18 |
| | 20 | 1 | | | 330 | 19000 | $2.0*10^{-6}$ | | 32 |
| | 25 | 2 | | ±0.2 | 720 | 15000 | $6.1*10^{-6}$ | 1.7 | 63 |
| | 32 | 3.5 | | | 1300 | 12000 | $2.1*10^{-5}$ | | 130 |

Ordering Example: GOOFSMMS25 - 8 * 10 - 100 PCS
Model no. / Ød1 / Ød2 / Q'ty

## Flexible | Spiral Beam Coupling

# GOOFACML

- The flexure allowed by the beam portion of the couping is capable of accommodating angular, parallel, and axial misalignment.
- High wrench torque rigidity and sensitivity.
- Rotation character of clockwise or anti-clockwise are exactly the same.
- Free maintenance, oil-resist and anti-corrosiveness.
- Offset of angular, parallel, or axial deviation are individual allowed value, so couple reasons of axial offset appearing at same time would reduce the unit allowable value.

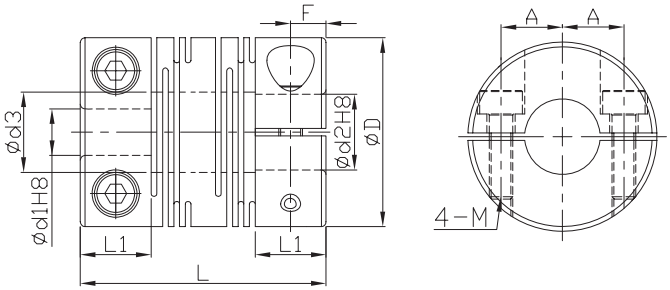


*Ød3=Ød2+0.5

| Material | Surface Finish | Accessories |
|---|---|---|
| Super Duralumin | Anodized | Hexagon Socket Screw |

| Dimensions | | Ød1 | Ød2 | | | | | | | | | | | | | L | L1 | M Rough thread | A | F |
|---|---|---|---|---|---|---|---|---|---|---|---|---|---|---|---|---|---|---|---|---|
| Model No. | ØD | | 4 | 5 | 6 | 6.35 | 7 | 8 | 9.525 | 10 | 11 | 12 | 14 | 15 | 16 | | | | | |
| GOOFACML | 12 | 4 | • | • | | | | | | | | | | | | 18.5 | 5 | 2 | 4 | 2.5 |
| | | 5 | | • | | | | | | | | | | | | | | | | |
| | 16 | 5 | | • | • | | | | | | | | | | | 23 | 6.5 | 2.5 | 5 | 3.25 |
| | | 6 | | | • | | | | | | | | | | | | | | | |
| | 20 | 5 | | | • | • | • | • | | | | | | | | 26 | 7.5 | | 6.5 | 3.75 |
| | | 6 | | | • | • | • | • | | | | | | | | | | | | |
| | | 6.35 | | | | | | • | | | | | | | | | | | | |
| | | 8 | | | | | | • | | | | | | | | | | | | |
| | 25 | 5 | | | • | | | | | | | | | | | 31 | 8.5 | 3 | 9 | 4.25 |
| | | 6 | | | • | • | | • | | • | | | | | | | | | | |
| | | 6.35 | | | | | | • | | • | | | | | | | | | | |
| | | 8 | | | | | | • | • | • | | | | | | | | | | |
| | | 9.525 | | | | | | | | • | | | | | | | | | | |
| | | 10 | | | | | | | | • | | | | | | | | | | |
| | 32 | 8 | | | | | | • | • | • | | • | | | | 41 | 12 | 4 | 11 | 6 |
| | | 9.525 | | | | | | | | • | | • | | | | | | | | |
| | | 10 | | | | | | | | • | • | • | • | | | | | | | |
| | | 12 | | | | | | | | | | • | • | | | | | | | |
| | 40 | 8 | | | | | | • | | • | | | | | | 56 | 17 | 5 | 14 | 8.5 |
| | | 10 | | | | | | | | • | | | | | | | | | | |
| | | 12 | | | | | | | | | | • | • | | | | | | | |
| | | 14 | | | | | | | | | | | • | | • | | | | | |
| | | 15 | | | | | | | | | | | | • | | | | | | |
| | | 16 | | | | | | | | | | | | | • | | | | | |

★Moment of inertial torque and weight calculated by maximum diameter.

| Specification | | Allowable Wrench Torque (N·m) | Allowable Misalignment | | | Static Torsional Stiffness (N·m/rad) | Max. RPM ($r/min^{-1}$) | ★ Moment of Inertia ($kg·m^2$) | Screw Fixing Torque (N·m) | ★ Weight (g) |
|---|---|---|---|---|---|---|---|---|---|---|
| Model No. | ØD | | Angular (°) | Parallel (mm) | Axial (mm) | | | | | |
| GOOFACML | 12 | 0.4 | 2 | 0.10 | ±0.3 | 45 | 12000 | $7.8*10^{-8}$ | 0.5 | 3.6 |
| | 16 | 0.5 | | | ±0.4 | 80 | 9500 | $3.4*10^{-7}$ | 1 | 9.2 |
| | 20 | 1 | | | | 170 | 7600 | $9.1*10^{-7}$ | | 16 |
| | 25 | 2 | | 0.15 | ±0.5 | 380 | 6100 | $2.6*10^{-6}$ | 1.5 | 28 |
| | 32 | 4 | | | | 500 | 4800 | $9.7*10^{-6}$ | 2.5 | 64 |
| | 40 | 8 | | 0.20 | | 600 | 3800 | $3.3*10^{-5}$ | 4 | 140 |

| Ordering Example: | GOOFACML32 | - | 10 | * | 12 | - | 100 PCS |
|---|---|---|---|---|---|---|---|
| | Model no. | | Ød1 | | Ød2 | | Q'ty |

## Flexible | Spiral Beam Coupling

# GOOFACMS

- Zero rotation backlash.
- The flexure allowed by the beam portion of the couping is capable of accommodating angular, and axial misalignment.
- No accommodating to parallel misalignment.
- High wrench torque rigidity and sensitivity.
- Rotation character of clockwise or anti-clockwise are exactly the same.
- Free maintenance, oil-resist and anti-corrosiveness.
- FACMS can't allow axial deviation caused by offset
- Offset of angular, parallel, or axial deviation are individual allowed value, so couple reasons of axial offset appearing at same time would reduce the unit allowable value.

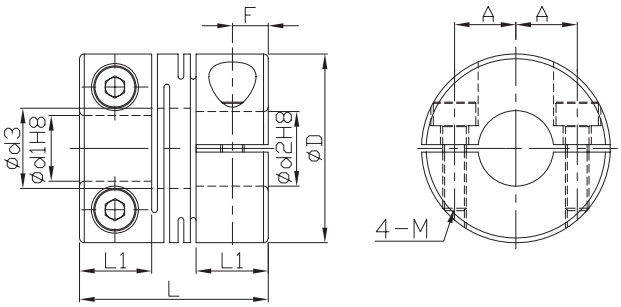


*Ød3=Ød2+0.5

| Material | Surface Finish | Accessories |
|---|---|---|
| Super Duralumin | Anodized | Hexagon Socket Screw |

| Dimensions | | Ød1 | Ød2 | | | | | | | | L | L1 | M Rough thread | A | F |
|---|---|---|---|---|---|---|---|---|---|---|---|---|---|---|---|
| Model No. | ØD | | 4 | 5 | 6 | 7 | 8 | 10 | 12 | 14 | | | | | |
| GOOFACMS | 12 | 4 | • | • | | | | | | | 14 | 5.2 | 2 | 4 | 2.6 |
| | | 5 | | • | | | | | | | | | | | |
| | 16 | 5 | | • | • | | | | | | 18 | 6.8 | 2.5 | 5 | 3.4 |
| | | 6 | | | • | | | | | | | | | | |
| | 20 | 5 | | | • | • | • | | | | 20 | 7.65 | | 6.5 | 3.8 |
| | | 6 | | | • | • | • | | | | | | | | |
| | | 8 | | | | | • | | | | | | | | |
| | 25 | 5 | | | • | | | | | | 25 | 9.6 | 3 | 9 | 4.8 |
| | | 6 | | | • | | • | • | | | | | | | |
| | | 8 | | | | | • | • | | | | | | | |
| | | 10 | | | | | | • | | | | | | | |
| | 32 | 8 | | | | | • | • | | | 32 | 12.6 | 4 | 11 | 6.3 |
| | | 10 | | | | | | • | • | • | | | | | |
| | | 12 | | | | | | | • | • | | | | | |

★Moment of inertial torque and weight calculated by maximum diameter.

| Specification | | Allowable Wrench Torque (N·m) | Allowable Misalignment | | Static Torsional Stiffness (N·m/rad) | Max. RPM ($r/min^{-1}$) | ★ Moment of Inertia ($kg·m^2$) | Screw Fixing Torque (N·m) | ★ Weight (g) |
|---|---|---|---|---|---|---|---|---|---|
| Model No. | ØD | | Angular ( ° ) | Axial (mm) | | | | | |
| GOOFACMS | 12 | 0.4 | 1 | ±0.1 | 80 | 12000 | $6.4*10^{-8}$ | 0.5 | 3 |
| | 16 | 0.5 | | ±0.2 | 180 | 9500 | $2.9*10^{-7}$ | 1 | 8 |
| | 20 | 1 | | | 200 | 7600 | $7.5*10^{-7}$ | | 13 |
| | 25 | 2 | | | 780 | 6100 | $2.3*10^{-6}$ | 1.5 | 25 |
| | 32 | 4 | | | 1100 | 4800 | $8.1*10^{-6}$ | 2.5 | 53 |

| Ordering Example: | GOOFAMS25 | - | 8 | * | 10 | - | 100 PCS |
|---|---|---|---|---|---|---|---|
| | Model no. | | Ød1 | | Ød2 | | Q'ty |

## Flexible | Spiral Beam Coupling

# GOOFSCML

- The flexure allowed by the beam portion of the couping is capable of accommodating angular, parallel, and axial misalignment.
- High wrench torque rigidity and sensitivity.
- Rotation character of clockwise or anti-clockwise are exactly the same.
- Free maintenance, oil-resist and anti-corrosiveness.
- Offset of angular, parallel, or axial deviation are individual allowed value, so couple reasons of axial offset appearing at same time would reduce the unit allowable value.

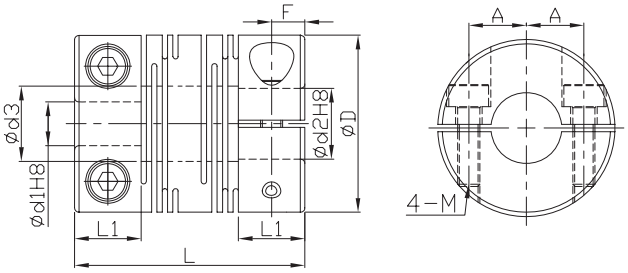


*Ød3=Ød2+0.5
*1pc clamping screw in ØD12~DØ32 of stainless steel type.

| Material | Accessories |
|---|---|
| SUS303 | Hexagon Socket Screw |

| Dimensions | | Ød1 | Ød2 | | | | | | | | | | | | | L | L1 | M Rough thread | A | F |
|---|---|---|---|---|---|---|---|---|---|---|---|---|---|---|---|---|---|---|---|---|
| Model No. | ØD | | 4 | 5 | 6 | 6.35 | 7 | 8 | 9.525 | 10 | 11 | 12 | 14 | 15 | 16 | | | | | |
| GOOFSCML | 12 | 4 | • | • | | | | | | | | | | | | 18.5 | 5 | 2 | 4 | 2.5 |
| | | 5 | | • | | | | | | | | | | | | | | | | |
| | 16 | 5 | | • | • | | | | | | | | | | | 23 | 6.5 | 2.5 | 5 | 3.25 |
| | | 6 | | | • | | | | | | | | | | | | | | | |
| | 20 | 5 | | | • | • | • | • | | | | | | | | 26 | 7.5 | | 6.5 | 3.75 |
| | | 6 | | | • | • | • | • | | | | | | | | | | | | |
| | | 6.35 | | | | | | • | | | | | | | | | | | | |
| | | 8 | | | | | | • | | | | | | | | | | | | |
| | 25 | 5 | | | • | | | | | | | | | | | 31 | 8.5 | 3 | 9 | 4.25 |
| | | 6 | | | • | • | | • | | • | | | | | | | | | | |
| | | 6.35 | | | | | | • | | • | | | | | | | | | | |
| | | 8 | | | | | | • | • | • | | | | | | | | | | |
| | | 9.525 | | | | | | | | • | | | | | | | | | | |
| | | 10 | | | | | | | | • | | | | | | | | | | |
| | 32 | 8 | | | | | | • | • | • | | • | | | | 41 | 12 | 4 | 11 | 6 |
| | | 9.525 | | | | | | | | • | | • | | | | | | | | |
| | | 10 | | | | | | | | • | • | • | • | | | | | | | |
| | | 12 | | | | | | | | | | • | • | | | | | | | |
| | 40 | 8 | | | | | | • | | • | | | | | | 56 | 17 | 5 | 14 | 8.5 |
| | | 10 | | | | | | | | • | | | | | | | | | | |
| | | 12 | | | | | | | | | | • | • | | | | | | | |
| | | 14 | | | | | | | | | | | • | | • | | | | | |
| | | 15 | | | | | | | | | | | | • | | | | | | |
| | | 16 | | | | | | | | | | | | | • | | | | | |

★Moment of inertial torque and weight calculated by maximum diameter.

| Specification | | Allowable Wrench Torque (N·m) | Allowable Misalignment | | | Static Torsional Stiffness (N·m/rad) | Max. RPM ($r/min^{-1}$) | ★ Moment of Inertia ($kg·m^2$) | Screw Fixing Torque (N·m) | ★ Weight (g) |
|---|---|---|---|---|---|---|---|---|---|---|
| Model No. | ØD | | Angular (°) | Parallel (mm) | Axial (mm) | | | | | |
| GOOFSCML | 12 | 0.3 | 2 | 0.10 | ±0.2 | 64 | 12000 | $2.2*10^{-7}$ | 0.5 | 10 |
| | 16 | 0.5 | | | ±0.3 | 85 | 9500 | $9.0*10^{-7}$ | 1 | 25 |
| | 20 | 1 | | | | 250 | 7600 | $2.5*10^{-6}$ | | 43 |
| | 25 | 2 | | 0.15 | ±0.4 | 330 | 6100 | $7.1*10^{-6}$ | 1.5 | 78 |
| | 32 | 3.5 | | | ±0.5 | 850 | 4800 | $2.7*10^{-5}$ | 2.5 | 170 |
| | 40 | 8 | | 0.20 | | 1000 | 3800 | $9.0*10^{-5}$ | 4 | 370 |

Ordering Example: GOOFSCML32 (Model no.) - 12 (Ød1) * 14 (Ød2) - 100 PCS (Q'ty)

## Flexible | Spiral Beam Coupling

# GOOFSCMS

- Zero rotation backlash.
- The flexure allowed by the beam portion of the couping is capable of accommodating angular, and axial misalignment.
- No accommodating to parallel misalignment.
- High wrench torque rigidity and sensitivity.
- Rotation character of clockwise or anti-clockwise are exactly the same.
- Free maintenance, oil-resist and anti-corrosiveness.
- FSCMS can't allow axial deviation caused by offset
- Offset of angular, parallel, or axial deviation are individual allowed value, so couple reasons of axial offset appearing at same time would reduce the unit allowable value.

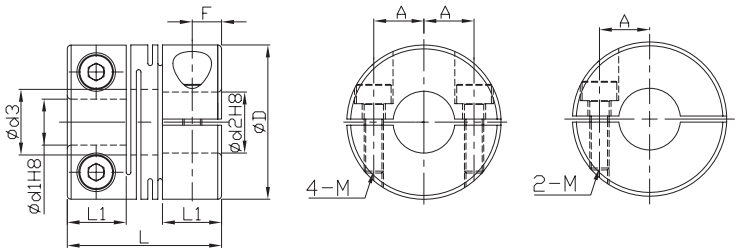


*Ød3=Ød2+0.5
*1pc clamping screw in ØD12~DØ32 of stainless steel type.

| Material | Accessories |
|---|---|
| SUS303 | Hexagon Socket Screw |

| Dimensions | | Ød1 | Ød2 | | | | | | | | L | L1 | M Rough thread | A | F |
|---|---|---|---|---|---|---|---|---|---|---|---|---|---|---|---|
| Model No. | ØD | | 4 | 5 | 6 | 7 | 8 | 10 | 12 | 14 | | | | | |
| GOOFSCMS | 12 | 4 | • | • | | | | | | | 14 | 5.2 | 2 | 4 | 2.6 |
| | | 5 | | • | | | | | | | | | | | |
| | 16 | 5 | | • | • | | | | | | 18 | 6.8 | 2.5 | 5 | 3.4 |
| | | 6 | | | • | | | | | | | | | | |
| | 20 | 5 | | | • | • | • | | | | 20 | 7.65 | | 6.5 | 3.8 |
| | | 6 | | | • | • | • | | | | | | | | |
| | | 8 | | | | | • | | | | | | | | |
| | 25 | 5 | | | • | | | | | | 25 | 9.6 | 3 | 9 | 4.8 |
| | | 6 | | | • | | • | • | | | | | | | |
| | | 8 | | | | | • | • | | | | | | | |
| | | 10 | | | | | | • | | | | | | | |
| | 32 | 8 | | | | | • | • | | | 32 | 12.6 | 4 | 11 | 6.3 |
| | | 10 | | | | | | • | • | • | | | | | |
| | | 12 | | | | | | | • | • | | | | | |

★Moment of inertial torque and weight calculated by maximum diameter.

| Specification | | Allowable Wrench Torque (N·m) | Allowable Misalignment | | Static Torsional Stiffness (N·m/rad) | Max. RPM ($r/min^{-1}$) | ★ Moment of Inertia ($kg·m^2$) | Screw Fixing Torque (N·m) | ★ Weight (g) |
|---|---|---|---|---|---|---|---|---|---|
| Model No. | ØD | | Angular (°) | Axial (mm) | | | | | |
| GOOFSCMS | 12 | 0.3 | 1 | ±0.1 | 140 | 12000 | $1.8*10^{-7}$ | 0.5 | 8.5 |
| | 16 | 0.5 | | | 240 | 9500 | $7.8*10^{-7}$ | 1 | 21 |
| | 20 | 1 | | ±0.2 | 330 | 7600 | $2.1*10^{-6}$ | | 36 |
| | 25 | 2 | | | 720 | 6100 | $6.3*10^{-6}$ | 1.5 | 69 |
| | 32 | 3.5 | | | 1300 | 4800 | $2.2*10^{-5}$ | 2.5 | 150 |

| Ordering Example: | GOOFSCMS25 | - | 6 | * | 8 | - | 100 PCS |
|---|---|---|---|---|---|---|---|
| | Model no. | | Ød1 | | Ød2 | | Q'ty |

## Flexible | Disk Coupling

# GOOFACCL

- High wrench torque load, high wrench torque rigidity capacity and excellent sensibility.
- Zero rotation backlash.
- The flexure allowed by the stainless steel disk portion of the couping is capable of accommodating angular, parallel, and axial misalignment.
- Clockwise character is exactly the same as anti-clockwise one.
- Free maintenance, oil-resist and anti-corrosiveness.
- Teethless screw to lock disks.
- Offset of angular, parallel, or axial deviation are individual allowed value, so couple reasons of axial offset appearing at same time would reduce the unit allowable value.

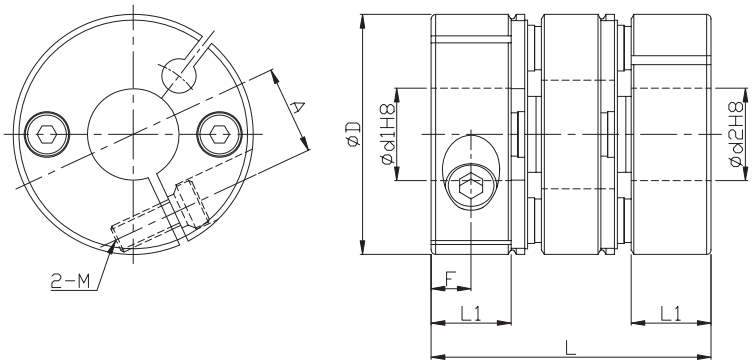


| Component | Material | Surface Finish | Accessories |
|---|---|---|---|
| Main frame | Aluminum Alloy | Anodized | Hexagon Socket Screw |
| Disk | SUS301 | – | |

| Dimensions | | Ød1&Ød2 selection *Ød1 ≦ Ød2 | | | | | | | | | | | | | | | | L | L1 | A | F | Clamping screw | |
|---|---|---|---|---|---|---|---|---|---|---|---|---|---|---|---|---|---|---|---|---|---|---|---|
| Model No. | ØD | 4 | 5 | 6 | 8 | 9 | 10 | 11 | 12 | 14 | 15 | 17 | 19 | 20 | 22 | 24 | 25 | | | | | M | Lock torque (N·m) |
| FACCL | 21 | • | • | • | • | • | | | | | | | | | | | | 24.5 | 7 | 7 | 3.5 | M2.5 | 1.2 |
| | 28 | | • | • | • | • | • | | | | | | | | | | | 32 | 9 | 9.5 | 4 | M3 | 1.5 |
| | 34 | | | • | • | • | • | • | • | • | | | | | | | | 35 | 9.8 | 12 | 5 | M3 | 1.5 |
| | 46 | | | | • | • | • | • | • | • | • | • | • | | | | | 44 | 12.6 | 16.5 | 6 | M4 | 3.5 |
| | 55 | | | | | | | | • | • | • | • | • | • | • | • | • | 55 | 16 | 20.5 | 7 | M5 | 6 |

★Moment of inertial torque and weight calculated by maximum diameter.

| Specification | | Allowable Wrench Torque (N·m) | Allowable Misalignment | | | Static Torsional Stiffness (N·m/rad) | Max. RPM ($r/min^{-1}$) | ★ Moment of Inertia ($kg·m^2$) | ★Weight (g) |
|---|---|---|---|---|---|---|---|---|---|
| Model No. | ØD | | Angular (°) | Parallel (mm) | Axial (mm) | | | | |
| FACCL | 21 | 1.2 | 1.0 | 0.10 | ±0.20 | 1000 | 10000 | $1.11*10^{-6}$ | 17 |
| | 28 | 1.6 | 1.2 | 0.15 | | 1300 | | $4.68*10^{-6}$ | 42 |
| | 34 | 4 | 1.5 | 0.20 | | 2800 | | $1.10*10^{-5}$ | 65 |
| | 46 | 10 | | 0.25 | ±0.30 | 6200 | | $4.70*10^{-5}$ | 151 |
| | 55 | 25 | | | | 12000 | | $1.19*10^{-4}$ | 260 |

| Ordering Example: | FACCL46 | - | 10 | * | 12 | - | 100 PCS |
|---|---|---|---|---|---|---|---|
| | Model no. | | Ød1 | | Ød2 | | Q'ty |

## Flexible | Disk Coupling

# GOOFACCS

- High wrench torque load, high wrench torque rigidity capacity and excellent sensibility.
- Zero rotation backlash.
- The flexure allowed by the stainless steel disk portion of the couping is capable of accommodating angular, and axial misalignment.
- Clockwise character is exactly the same as anti-clockwise one.
- Free maintenance, oil-resist and anti-corrosiveness.
- Teethless screw to lock disks.
- Offset of angular, parallel, or axial deviation are individual allowed value, so couple reasons of axial offset appearing at same time would reduce the unit allowable value.

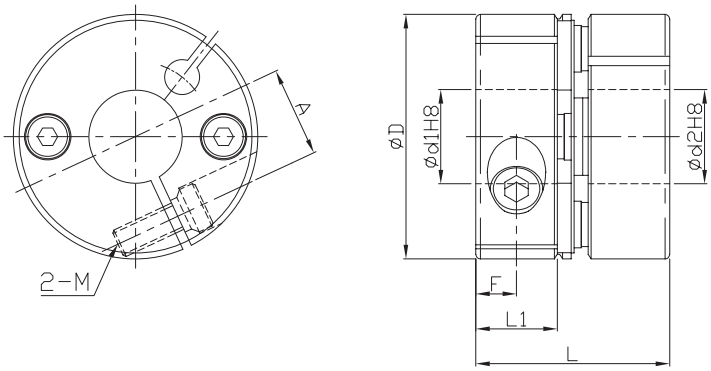


| Component | Material | Surface Finish | Accessories |
|---|---|---|---|
| Main frame | Aluminum Alloy | Anodized | Hexagon Socket Screw |
| Disk | SUS301 | – | |

| Dimensions | | Ød1&Ød2 selection *Ød1 ≦ Ød2 | | | | | | | | | | | | | | | | L | L1 | A | F | Clamping screw | |
|---|---|---|---|---|---|---|---|---|---|---|---|---|---|---|---|---|---|---|---|---|---|---|---|
| Model No. | ØD | 4 | 5 | 6 | 8 | 9 | 10 | 11 | 12 | 14 | 15 | 17 | 19 | 20 | 22 | 24 | 25 | | | | | M | Lock torque (N·m) |
| FACCS | 21 | • | • | • | • | • | | | | | | | | | | | | 16.7 | 7 | 7 | 3.5 | M2.5 | 1.2 |
| | 28 | | • | • | • | • | • | | | | | | | | | | | 21 | 9 | 9.5 | 4 | M3 | 1.5 |
| | 34 | | | • | • | • | • | • | • | • | | | | | | | | 23.3 | 9.8 | 12 | 5 | M3 | 1.5 |
| | 46 | | | | • | • | • | • | • | • | • | • | • | | | | | 29.8 | 12.6 | 16.5 | 6 | M4 | 3.5 |
| | 55 | | | | | | | | • | • | • | • | • | • | • | • | • | 37.2 | 16 | 20.5 | 7 | M5 | 6 |

★Moment of inertial torque and weight calculated by maximum diameter.

| Specification | | Allowable Wrench Torque (N·m) | Allowable Misalignment | | Static Torsional Stiffness (N·m/rad) | Max. RPM ($r/min^{-1}$) | ★ Moment of Inertia ($kg·m^2$) | ★ Weight (g) |
|---|---|---|---|---|---|---|---|---|
| Model No. | ØD | | Angular (°) | Axial (mm) | | | | |
| FACCS | 21 | 1.2 | 1.0 | ±0.10 | 1500 | 10000 | $7.90*10^{-7}$ | 12 |
| | 28 | 1.6 | 1.2 | | 1800 | | $3.24*10^{-6}$ | 30 |
| | 34 | 4 | 1.5 | | 3600 | | $7.60*10^{-6}$ | 45 |
| | 46 | 10 | | ±0.15 | 10000 | | $3.23*10^{-5}$ | 105 |
| | 55 | 25 | | | 20000 | | $8.19*10^{-5}$ | 180 |

| Ordering Example: | FACCS34 | - | 10 | * | 14 | - | 100 PCS |
|---|---|---|---|---|---|---|---|
| | Model no. | | Ød1 | | Ød2 | | Q'ty |

## Flexible | Disk Coupling

# GOOFACHL

- High wrench torque load, high wrench torque rigidity capacity and excellent sensibility.
- Zero rotation backlash.
- Dual stainless steel disk to correct angular and axial deviation.
- Clockwise character is exactly the same as anti-clockwise one.
- Free maintenance, oil-resist and anti-corrosiveness.
- Offset of angular, parallel, or axial deviation are individual allowed value, so couple reasons of axial offset appearing at same time would reduce the unit allowable value.

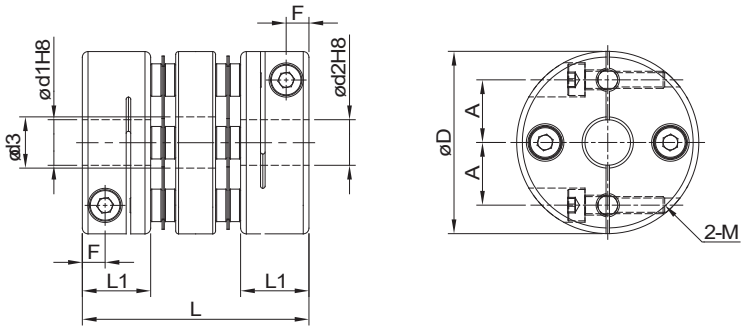


| Component | Material | Surface Finish | Accessories |
|---|---|---|---|
| Main frame | Aluminum Alloy | Anodized | Hexagon Socket Screw |
| Disk | SUS301 | — | |

| Dimensions | | Ød1&Ød2 selection *Ød1 ≦ Ød2 | | | | | | | | | | | | | | | | | | | | L | L1 | d3 | A | F | Clamping screw | |
|---|---|---|---|---|---|---|---|---|---|---|---|---|---|---|---|---|---|---|---|---|---|---|---|---|---|---|---|---|
| Model No. | ØD | 4 | 4.5 | 5 | 6 | 6.35 | 7 | 8 | 9.525 | 10 | 11 | 12 | 14 | 15 | 16 | 17 | 18 | 19 | 20 | 22 | 24 | 25 | | | | | | M | Lock torque (N·m) |
| GOOFACHL | 19 | • | • | • | • | • | • | • | | | | | | | | | | | | | | | 27 | 8 | 8.5 | 6.5 | 2.5 | 2 | 0.5 |
| | 25 | | | | • | • | • | • | • | • | • | • | | | | | | | | | | | 31 | 10 | 12.5 | 9 | 3.5 | 2.5 | 1 |
| | 32 | | | | | | | • | • | • | • | • | • | • | | | | | | | | | 40 | 12 | 16 | 11 | 4 | 3 | 1.5 |
| | 40 | | | | | | | • | • | • | • | • | • | • | • | • | • | • | • | | | | 44 | 14 | 21 | 15 | 5 | 4 | 2.5 |
| | 50 | | | | | | | | | | | | • | • | • | • | • | • | • | • | • | • | 57 | 18 | 26 | 18 | 6 | 5 | 7 |

★Moment of inertial torque and weight calculated by maximum diameter.

| Specification | | Allowable Wrench Torque (N·m) | Allowable Misalignment | | | Static Torsional Stiffness (N·m/rad) | Max. RPM ($r/min^{-1}$) | ★ Moment of Inertia ($kg·m^2$) | ★ Weight (g) |
|---|---|---|---|---|---|---|---|---|---|
| Model No. | ØD | | Angular (°) | Parallel (mm) | Axial (mm) | | | | |
| GOOFACHL | 19 | 0.7 | 1.5 | 0.12 | ±0.5 | 200 | 10000 | $8.7*10^{-7}$ | 18 |
| | 25 | 1 | | | | 450 | 8000 | $2.7*10^{-6}$ | 25 |
| | 32 | 2.5 | | 0.15 | | 1100 | 6000 | $9.6*10^{-6}$ | 60 |
| | 40 | 3.5 | | | | 1400 | 5000 | $1.9*10^{-5}$ | 100 |
| | 50 | 9 | | | | 2200 | 4000 | $8.1*10^{-5}$ | 210 |

| Ordering Example: | GOOFACHL40 | - | 10 | * | 12 | - | 100 PCS |
|---|---|---|---|---|---|---|---|
| | Model no. | | Ød1 | | Ød2 | | Q'ty |

## Flexible | Disk Coupling

# GOOFACHS

- Hard torque load、high torque rigidity and excellent sensibility.
- Zero rotation backlash.
- Miniature coupling has short length.
- Dual stainless steel disk to correct angular and axial deviation.
- No correction for radial deviation.
- Clockwise character is exactly the same as anti-clockwise one.
- Free maintenance, oil-resist and anti-corrosiveness.
- FACH-S can't allow axial deviation caused by offset.
- Offset of angular, parallel, or axial deviation are individual allowed value, so couple reasons of axial offset appearing at same time would reduce the unit allowable value.

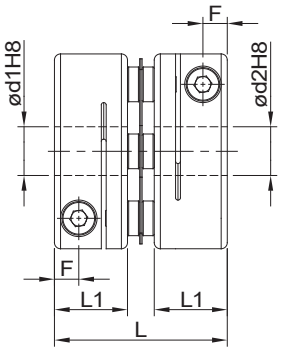


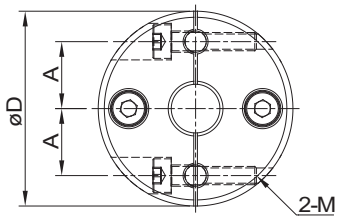


| Component | Material | Surface Finish | Accessories |
|---|---|---|---|
| Main frame | Aluminum Alloy | Anodized | Hexagon Socket Screw |
| Disk | SUS301 | — | |

| Dimensions | | Ød1&Ød2 selection *Ød1 ≦ Ød2 | | | | | | | | | | | | | | | | | | | | | L | L1 | F | A | Clamping screw | |
|---|---|---|---|---|---|---|---|---|---|---|---|---|---|---|---|---|---|---|---|---|---|---|---|---|---|---|---|---|
| Model No. | ØD | 4 | 4.5 | 5 | 6 | 6.35 | 7 | 8 | 9.525 | 10 | 11 | 12 | 14 | 15 | 16 | 17 | 18 | 19 | 20 | 22 | 24 | 25 | | | | | M | Lock torque (N·m) |
| GOOFACHS | 19 | • | • | • | • | • | • | • | | | | | | | | | | | | | | | 20 | 8 | 2.5 | 6.5 | 2 | 0.5 |
| | 25 | | | | • | • | • | • | • | • | • | • | | | | | | | | | | | 24 | 10 | 3.5 | 9 | 2.5 | 1 |
| | 32 | | | | | | | • | • | • | • | • | • | • | | | | | | | | | 29 | 12 | 4 | 11 | 3 | 1.5 |
| | 40 | | | | | | | • | • | • | • | • | • | • | • | • | • | • | • | | | | 33 | 14 | 5 | 15 | 4 | 2.5 |
| | 50 | | | | | | | | | | | | • | • | • | • | • | • | • | • | • | • | 42 | 18 | 6 | 18 | 5 | 7 |

★Moment of inertial torque and weight calculated by maximum diameter.

| Specification | | Allowable Wrench Torque (N·m) | Allowable Misalignment | | Static Torsional Stiffness (N·m/rad) | Max. RPM ($r/min^{-1}$) | ★ Moment of Inertia ($kg·m^2$) | ★ Weight (g) |
|---|---|---|---|---|---|---|---|---|
| Model No. | ØD | | Angular (°) | Axial (mm) | | | | |
| GOOFACHS | 19 | 0.7 | 0.7 | ±0.2 | 280 | 10000 | $6.3*10^{-7}$ | 9 |
| | 25 | 1 | | | 630 | 8000 | $2.1*10^{-6}$ | 19 |
| | 32 | 2.5 | | | 1600 | 6000 | $7.2*10^{-6}$ | 41 |
| | 40 | 3.5 | | | 2600 | 5000 | $1.3*10^{-5}$ | 68 |
| | 50 | 9 | | | 3100 | 4000 | $6.1*10^{-5}$ | 140 |

| Ordering Example: | GOOFACHS40 | - | 10 | * | 12 | - | 100 PCS |
|---|---|---|---|---|---|---|---|
| | Model no. | | Ød1 | | Ød2 | | Q'ty |

## Flexible | Disk Coupling

# GOOFACTL

- High wrench torque load, high wrench torque rigidity capacity and excellent sensibility.
- Zero rotation backlash.
- Dual stainless steel rings to correct radial、angular and axial deviation.
- Clockwise character is exactly the same as anti-clockwise one.
- Free maintenance, oil-resist and anti-corrosiveness.
- Offset of angular, parallel, or axial deviation are individual allowed value, so couple reasons of axial offset appearing at same time would reduce the unit allowable value.

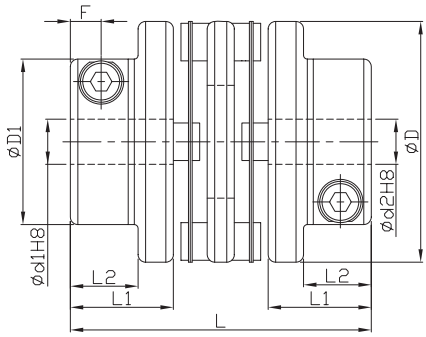


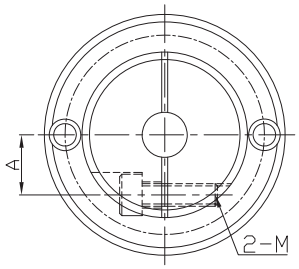


| Component | Material | Surface Finish | Accessories |
|---|---|---|---|
| Main frame | Aluminum Alloy | Anodized | Hexagon Socket Screw |
| Disk | SUS301 | – | |
| Pin | SUS303 | | |

| Dimensions | | ØD1 | Ød1&Ød2 selection *Ød1 ≦ Ød2 | | | | | | | | | | | | | L | L1 | L2 | A | F | Clamping screw | |
|---|---|---|---|---|---|---|---|---|---|---|---|---|---|---|---|---|---|---|---|---|---|---|
| Model No. | ØD | | 6 | 7 | 8 | 10 | 11 | 12 | 14 | 15 | 16 | 18 | 19 | 20 | 25 | | | | | | M | Lock torque (N·m) |
| GOOFACTL | 32 | 22 | • | • | • | • | | | | | | | | | | 40 | 13.7 | 9 | 8 | 4 | 3 | 1.5 |
| | 40 | 28 | | • | • | • | • | • | • | | | | | | | 46 | 16.5 | 12 | 10.5 | 6 | 4 | 2.5 |
| | 50 | 39 | | | | | | • | • | • | • | • | • | • | | 52 | 19.4 | 15 | 14.8 | 7 | 5 | 7 |
| | 63 | 45 | | | | | | | | • | • | • | • | • | • | 58 | 22.3 | 18 | 17 | 8 | 6 | 12 |

★Moment of inertial torque and weight calculated by maximum diameter.

| Specification | | Allowable Wrench Torque (N·m) | Allowable Misalignment | | | Static Torsional Stiffness (N·m/rad) | Max. RPM ($r/min^{-1}$) | ★ Moment of Inertia ($kg·m^2$) | ★ Weight (g) |
|---|---|---|---|---|---|---|---|---|---|
| Model No. | ØD | | Angular (°) | Parallel (mm) | Axial (mm) | | | | |
| GOOFACTL | 32 | 2 | 2 | 0.15 | ±0.4 | 1000 | 4800 | $6.2*10^{-6}$ | 48 |
| | 40 | 4 | | 0.2 | ±0.5 | 1500 | 3800 | $1.6*10^{-5}$ | 81 |
| | 50 | 7.5 | | | ±0.6 | 2000 | 3100 | $4.6*10^{-5}$ | 150 |
| | 63 | 10 | | 0.3 | ±0.8 | 2500 | 2400 | $1.1*10^{-4}$ | 230 |

| Ordering Example: | GOOFACTL40 | - | 12 | * | 14 | - | 100 PCS |
|---|---|---|---|---|---|---|---|
| | Model no. | | Ød1 | | Ød2 | | Q'ty |

## Flexible | Disk Coupling

# GOOFACTS

- Hard torque load、high torque rigidity and excellent sensibility.
- Zero rotation backlash.
- Dual stainless steel disk to correct angular and axial deviation.
- No correction for radial deviation.
- Clockwise character is exactly the same as anti-clockwise one.
- Free maintenance, oil-resist and anti-corrosiveness.
- FACTS can't allow axial deviation caused by offset.
- Offset of angular, parallel, or axial deviation are individual allowed value, so couple reasons of axial offset appearing at same time would reduce the unit allowable value.

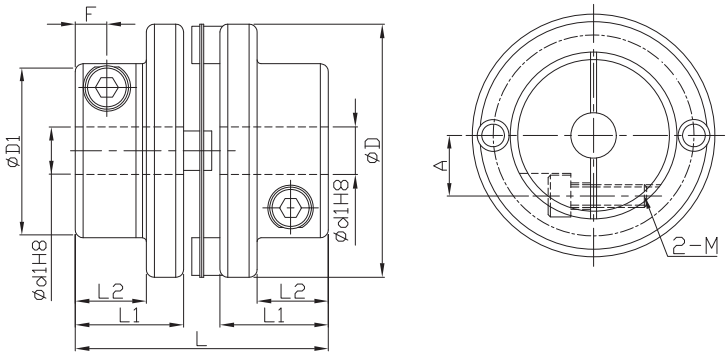


| Component | Material | Surface Finish | Accessories |
|---|---|---|---|
| Main frame | Aluminum Alloy | Anodized | Hexagon Socket Screw |
| Disk | SUS301 | – | |
| Pin | SUS303 | | |

| Dimensions | | ØD1 | Ød1&Ød2 selection *Ød1 ≦ Ød2 | | | | | | | | | | | | | L | L1 | L2 | A | F | Clamping screw | |
|---|---|---|---|---|---|---|---|---|---|---|---|---|---|---|---|---|---|---|---|---|---|---|
| Model No. | ØD | | 6 | 7 | 8 | 10 | 11 | 12 | 14 | 15 | 16 | 18 | 19 | 20 | 25 | | | | | | M | Lock torque (N·m) |
| GOOFACTS | 32 | 22 | • | • | • | • | | | | | | | | | | 32 | 13.7 | 9 | 8 | 4 | 3 | 1.5 |
| | 40 | 28 | | • | • | • | • | • | • | | | | | | | 38 | 16.5 | 12 | 10.5 | 6 | 4 | 2.5 |
| | 50 | 39 | | | | | | • | • | • | • | • | • | • | | 44 | 19.4 | 15 | 14.8 | 7 | 5 | 7 |
| | 63 | 45 | | | | | | | | • | • | • | • | • | • | 50 | 22.3 | 18 | 17 | 8 | 6 | 12 |

★Moment of inertial torque and weight calculated by maximum diameter.

| Specification | | Allowable Wrench Torque (N·m) | Allowable Misalignment | | Static Torsional Stiffness (N·m/rad) | Max. RPM ($r/min^{-1}$) | ★ Moment of Inertia ($kg·m^2$) | ★ Weight (g) |
|---|---|---|---|---|---|---|---|---|
| Model No. | ØD | | Angular (°) | Axial (mm) | | | | |
| GOOFACTS | 32 | 2 | 1 | ±0.2 | 1300 | 4800 | $4.5*10^{-6}$ | 38 |
| | 40 | 4 | | | 2800 | 3800 | $1.2*10^{-5}$ | 66 |
| | 50 | 7.5 | | | 3700 | 3100 | $3.7*10^{-5}$ | 120 |
| | 63 | 10 | | | 5000 | 2400 | $8.4*10^{-5}$ | 190 |

| Ordering Example: | GOOFACTS32 | - | 10 | * | 12 | - | 100 PCS |
|---|---|---|---|---|---|---|---|
| | Model no. | | Ød1 | | Ød2 | | Q'ty |

## Flexible | Bellows Coupling

# GOOFAMB

- Offset of angular, parallel, or axial deviation are individual allowed value, so couple reasons of axial offset appearing at same time would reduce the unit allowable value.

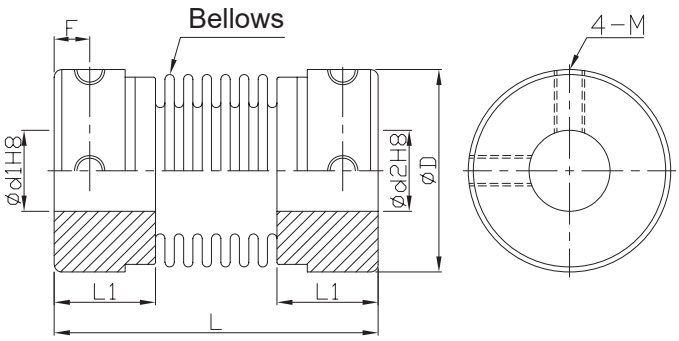


*When Ød1<4 and Ød2>5, there would be 3 set screws.
*When Ød1 and Ød2 both smaller than 4, there would be 2 set screws.

| Component | Material | Surface Finish | Accessories |
|---|---|---|---|
| Main frame | Aluminum Alloy | Anodized | Nylon Set Screw |
| Bellows | C5191 | – | |

| Dimensions | | Ød1&Ød2 selection *Ød1 ≦ Ød2 | | | | | | | | | | L | L1 | F | Set screw | |
|---|---|---|---|---|---|---|---|---|---|---|---|---|---|---|---|---|
| Model No. | ØD | 3 | 4 | 5 | 6 | 6.35 | 8 | 9.525 | 10 | 12 | 14 | | | | M | Lock torque (N·m) |
| GOOFAMB | 12 | • | • | • | • | • | | | | | | 23.5 | 7.5 | 2.5 | 2.5 | 0.5 |
| | 16 | | • | • | • | • | • | | | | | 26.5 | 9 | 3 | 3 | 0.7 |
| | 20 | | | • | • | • | • | • | • | | | 32 | 10 | 3.5 | | |
| | 25 | | | | • | • | • | • | • | • | | 36.5 | 12 | 4.5 | 4 | 1.7 |
| | 32 | | | | • | • | • | • | • | • | • | 42 | 13.5 | 5.5 | | |

★Moment of inertial torque and weight calculated by maximum diameter.

| Specification | | Allowable Wrench Torque (N·m) | Allowable Misalignment | | | Static Torsional Stiffness (N·m/rad) | Max. RPM ($r/min^{-1}$) | ★ Moment of Inertia ($kg·m^2$) | ★ Weight (g) |
|---|---|---|---|---|---|---|---|---|---|
| Model No. | ØD | | Angular (°) | Parallel (mm) | Axial (mm) | | | | |
| GOOFAMB | 12 | 0.3 | 1.5 | 0.10 | +0.4 | 82 | 32000 | $9.0*10^{-8}$ | 4 |
| | 16 | 0.5 | | | -1.2 | 110 | 24000 | $3.5*10^{-7}$ | 9 |
| | 20 | 0.8 | 2 | 0.15 | +0.6 | 180 | 19000 | $9.9*10^{-7}$ | 16 |
| | 25 | 1.3 | | | -1.8 | 240 | 15000 | $3.1*10^{-6}$ | 32 |
| | 32 | 2 | | 0.20 | +0.8<br>-2.5 | 330 | 12000 | $9.2*10^{-6}$ | 57 |

| Ordering Example: | GOOFAMB20 | - | 6 | * | 8 | - | 100 PCS |
|---|---|---|---|---|---|---|---|
| | Model no. | | Ød1 | | Ød2 | | Q'ty |

## Flexible | Bellows Coupling

# GOOFSMB

- Offset of angular, parallel, or axial deviation are individual allowed value, so couple reasons of axial offset appearing at same time would reduce the unit allowable value.

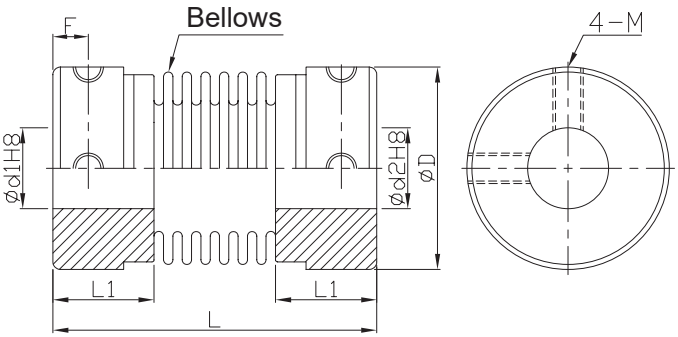


*When Ød1<4 and Ød2>5, there would be 3 set screws.
*When Ød1 and Ød2 both smaller than 4, there would be 2 set screws.

| Component | Material | Accessories |
|---|---|---|
| Main frame | SUS303 | Nylon Set Screw |
| Bellows | SUS316 | |

| Dimensions | | Ød1&Ød2 selection *Ød1 ≦ Ød2 | | | | | | | | | | L | L1 | F | Set screw | |
|---|---|---|---|---|---|---|---|---|---|---|---|---|---|---|---|---|
| Model No. | ØD | 3 | 4 | 5 | 6 | 6.35 | 8 | 9.525 | 10 | 12 | 14 | | | | M | Lock torque (N·m) |
| GOOFSMB | 12 | • | • | • | • | • | | | | | | 23.5 | 7.5 | 2.5 | 2.5 | 0.5 |
| | 16 | | • | • | • | • | • | | | | | 26.5 | 9 | 3 | 3 | 0.7 |
| | 20 | | | • | • | • | • | • | • | | | 32 | 10 | 3.5 | | |
| | 25 | | | | • | • | • | • | • | • | | 36.5 | 12 | 4.5 | 4 | 1.7 |
| | 32 | | | | • | • | • | • | • | • | • | 42 | 13.5 | 5.5 | | |

★Moment of inertial torque and weight calculated by maximum diameter.

| Specification | | Allowable Wrench Torque (N·m) | Allowable Misalignment | | | Static Torsional Stiffness (N·m/rad) | Max. RPM ($r/min^{-1}$) | ★ Moment of Inertia ($kg·m^2$) | ★ Weight (g) |
|---|---|---|---|---|---|---|---|---|---|
| Model No. | ØD | | Angular (°) | Parallel (mm) | Axial (mm) | | | | |
| GOOFSMB | 12 | 0.5 | 1.5 | 0.10 | +0.4 | 100 | 32000 | $2.1*10^{-7}$ | 9 |
| | 16 | 1 | | | -1.2 | 150 | 24000 | $8.0*10^{-7}$ | 20 |
| | 20 | 1.5 | 2 | 0.15 | +0.6 | 220 | 19000 | $2.3*10^{-6}$ | 37 |
| | 25 | 2 | | | -1.8 | 330 | 15000 | $7.0*10^{-6}$ | 73 |
| | 32 | 3 | | 0.20 | +0.8<br>-2.5 | 490 | 12000 | $2.1*10^{-5}$ | 130 |

| Ordering Example: | GOOFAMB25 | - | 8 | * | 10 | - | 100 PCS |
|---|---|---|---|---|---|---|---|
| | Model no. | | Ød1 | | Ød2 | | Q'ty |

## Flexible | Bellows Coupling

# GOOFACB

- Offset of angular, parallel, or axial deviation are individual allowed value, so couple reasons of axial offset appearing at same time would reduce the unit allowable value.

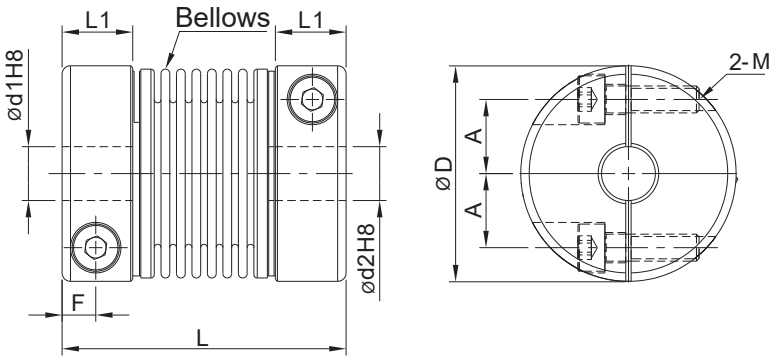


| Component | Material | Surface Finish | Accessories |
|---|---|---|---|
| Main frame | Aluminum Alloy | Anodized | Hexagon Socket Screw |
| Bellows | C5191 | – | |

| Dimensions | | Ød1&Ød2 selection *Ød1 ≦ Ød2 | | | | | | | | | L | L1 | F | A | Clamping screw | |
|---|---|---|---|---|---|---|---|---|---|---|---|---|---|---|---|---|
| Model No. | ØD | 4 | 5 | 6 | 6.35 | 8 | 9.525 | 10 | 12 | 14 | | | | | M | Lock torque (N·m) |
| GOOFACB | 12 | • | • | | | | | | | | 23.5 | 7.5 | 2.3 | 4 | 2 | 0.5 |
| | 16 | • | • | • | • | | | | | | 26.5 | 9 | 3 | 5 | 2.5 | 1 |
| | 20 | | • | • | • | • | | | | | 32 | 10 | 3.5 | 6.5 | | |
| | 25 | | | • | • | • | • | • | | | 36.5 | 12 | 4.5 | 9 | 3 | 1.5 |
| | 32 | | | | | • | • | • | • | • | 42 | 13.5 | 5 | 11 | 4 | 2.5 |

★Moment of inertial torque and weight calculated by maximum diameter.

| Specification | | Allowable Wrench Torque (N·m) | Allowable Misalignment | | | Static Torsional Stiffness (N·m/rad) | Max. RPM ($r/min^{-1}$) | ★ Moment of Inertia ($kg·m^2$) | ★ Weight (g) |
|---|---|---|---|---|---|---|---|---|---|
| Model No. | ØD | | Angular (°) | Parallel (mm) | Axial (mm) | | | | |
| GOOFACB | 12 | 0.3 | 1.5 | 0.10 | +0.4 -1.2 | 82 | 13000 | $9.7*10^{-8}$ | 4 |
| | 16 | 0.5 | | | | 110 | 9500 | $3.7*10^{-7}$ | 10 |
| | 20 | 0.8 | 2 | 0.15 | +0.6 -1.8 | 180 | 7700 | $1.0*10^{-6}$ | 16 |
| | 25 | 1.3 | | | | 240 | 6100 | $3.1*10^{-6}$ | 32 |
| | 32 | 2 | | 0.20 | +0.8 -2.5 | 330 | 4800 | $9.6*10^{-6}$ | 58 |

| Ordering Example: | GOOFACB25 | - | 6 | * | 8 | - | 100 PCS |
|---|---|---|---|---|---|---|---|
| | Model no. | | Ød1 | | Ød2 | | Q'ty |

## Flexible | Bellows Coupling

# GOOFSCB

- Offset of angular, parallel, or axial deviation are individual allowed value, so couple reasons of axial offset appearing at same time would reduce the unit allowable value.

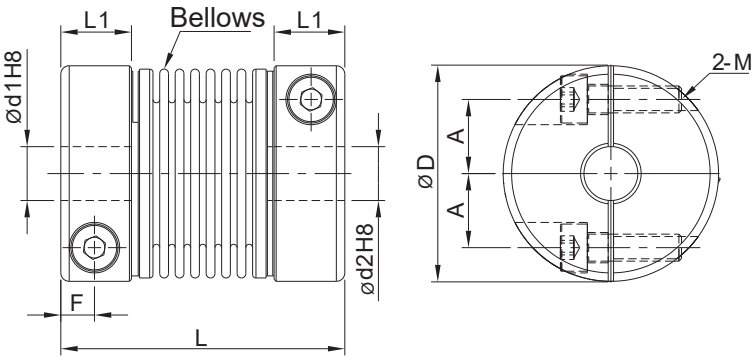


| Component | Material | Accessories |
|---|---|---|
| Main frame | SUS303 | Hexagon Socket Screw |
| Bellows | SUS316 | |

| Dimensions | | Ød1&Ød2 selection *Ød1 ≦ Ød2 | | | | | | | | | L | L1 | F | A | Clamping screw | |
|---|---|---|---|---|---|---|---|---|---|---|---|---|---|---|---|---|
| Model No. | ØD | 4 | 5 | 6 | 6.35 | 8 | 9.525 | 10 | 12 | 14 | | | | | M | Lock torque (N·m) |
| GOOFSCB | 12 | • | • | | | | | | | | 23.5 | 7.5 | 2.3 | 4 | 2 | 0.5 |
| | 16 | • | • | • | • | | | | | | 26.5 | 9 | 3 | 5 | 2.5 | 1 |
| | 20 | | • | • | • | • | | | | | 32 | 10 | 3.5 | 6.5 | | |
| | 25 | | | • | • | • | • | • | | | 36.5 | 12 | 4.5 | 9 | 3 | 1.5 |
| | 32 | | | | | • | • | • | • | • | 42 | 13.5 | 5 | 11 | 4 | 2.5 |

★Moment of inertial torque and weight calculated by maximum diameter.

| Specification | | Allowable Wrench Torque (N·m) | Allowable Misalignment | | | Static Torsional Stiffness (N·m/rad) | Max. RPM ($r/min^{-1}$) | ★ Moment of Inertia ($kg·m^2$) | ★ Weight (g) |
|---|---|---|---|---|---|---|---|---|---|
| Model No. | ØD | | Angular (°) | Parallel (mm) | Axial (mm) | | | | |
| GOOFSCB | 12 | 0.5 | 1.5 | 0.10 | +0.4 | 100 | 13000 | $2.1*10^{-7}$ | 9 |
| | 16 | 1 | | | -1.2 | 150 | 9500 | $8.1*10^{-7}$ | 22 |
| | 20 | 1.5 | 2 | 0.15 | +0.6 | 220 | 7700 | $2.3*10^{-6}$ | 38 |
| | 25 | 2 | | | -1.8 | 330 | 6100 | $6.9*10^{-6}$ | 74 |
| | 32 | 3 | | 0.20 | +0.8<br>-2.5 | 490 | 4800 | $2.1*10^{-5}$ | 130 |

| Ordering Example: | GOOFSCB20 | - | 6 | * | 8 | - | 100 PCS |
|---|---|---|---|---|---|---|---|
| | Model no. | | Ød1 | | Ød2 | | Q'ty |

## Flexible | Oldham Coupling

# GOOFSMG

- Offset of angular, parallel, or axial deviation are individual allowed value, so couple reasons of axial offset appearing at same time would reduce the unit allowable value.
- Suit for high wrench torque, high rotation.
- In case of parallel deviation over 0.1, abrasion of the insert is direct ration to load torque, offset, and rotation numbers.
- Available options for key way per inner diameter is bigger than 6mm. (Refer to page 38)

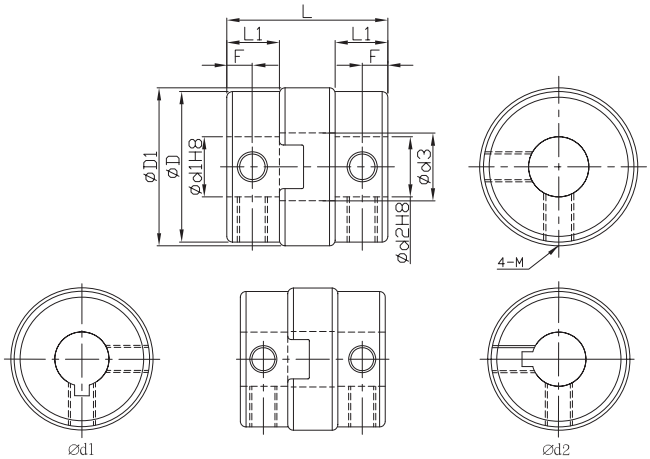


FSMGLK (key way Ød1 side)
FSMGRK (key way Ød2 side)
FSMGWK (key way Ød1 and Ød2 side)

| Component | Material | Accessories |
|---|---|---|
| Main frame | SUS303 | Nylon Set Screw |
| Spacer | Aluminum bronze | |

| Dimensions | | Ød1&Ød2 selection *Ød1 ≦ Ød2 | | | | | | | | | | | | | | | ØD | ØD1 | Ød3 | L | L1 | F | Set screw | |
|---|---|---|---|---|---|---|---|---|---|---|---|---|---|---|---|---|---|---|---|---|---|---|---|---|
| Model No. | ØD | 4 | 5 | 6 | 6.35 | 7 | 8 | 9.525 | 10 | 11 | 12 | 14 | 15 | 16 | 18 | 20 | | | | | | | M | Lock torque (N·m) |
| GOOFSMG | 15 | • | • | • | • | • | • | | | | | | | | | | 14.5 | 15 | 7.2 | 16 | 5.4 | 2.6 | 3 | 0.7 |
| | 17 | | • | • | • | • | • | | | | | | | | | | 16.8 | 17.5 | 8.2 | 19.8 | 6.7 | 3.2 | 4 | 1.7 |
| | 20 | | | • | • | • | • | • | • | • | • | | | | | | 20 | 21 | 9 | 21.6 | 7 | 3.4 | | |
| | 26 | | | • | • | • | • | • | • | • | • | • | | | | | 26 | 27 | 12 | 25.6 | 9 | 4 | | |
| | 30 | | | | | | • | | • | | • | • | | | | | 30 | 31 | 14 | 33 | 12 | 6 | | |
| | 34 | | | | | | | | • | • | • | • | • | • | | | 34 | 35 | 17 | 34 | 13 | 5.5 | 5 | 4.0 |
| | 38 | | | | | | | | • | | • | • | • | • | • | • | 38 | 41 | 17 | 39.5 | 15 | 7 | | |

★Moment of inertial torque and weight calculated by maximum diameter.

| Specification | | Allowable Wrench Torque (N·m) | Allowable Misalignment | | | Static Torsional Stiffness (N·m/rad) | Max. RPM ($r/min^{-1}$) | ★ Moment of Inertia ($kg·m^2$) | ★ Weight (g) |
|---|---|---|---|---|---|---|---|---|---|
| Model No. | ØD | | Angular (°) | Parallel (mm) | Axial (mm) | | | | |
| GOOFSMG | 15 | 3 | 1.5 | 0.5 | ±0.1 | 800 | 8000 | $4*10^{-8}$ | 15 |
| | 17 | 5 | | 0.5 | ±0.1 | 1000 | 7000 | $1*10^{-7}$ | 25 |
| | 20 | 7 | | 0.5 | ±0.1 | 2200 | 6000 | $2*10^{-6}$ | 37 |
| | 26 | 10 | | 0.8 | ±0.2 | 4000 | 5000 | $6*10^{-6}$ | 79 |
| | 30 | 30 | | 1 | ±0.3 | 5500 | 5000 | $2.5*10^{-5}$ | 120 |
| | 34 | 32 | | 1 | ±0.2 | 8000 | 4000 | $4*10^{-5}$ | 180 |
| | 38 | 50 | | 1 | ±0.3 | 11000 | 4000 | $1*10^{-4}$ | 256 |

| Ordering Example: | GOOFSMG26 | - | 8 | * | 12 | - | 100 PCS |
|---|---|---|---|---|---|---|---|
| | Model no. | | Ød1 | | Ød2 | | Q'ty |

## Flexible | Oldham Coupling

# GOOFSCG

- Offset of angular, parallel, or axial deviation are individual allowed value, so couple reasons of axial offset appearing at same time would reduce the unit allowable value.
- Suit for high wrench torque, high rotation.
- In case of parallel deviation over 0.1, abrasion of the insert is direct ration to load torque, offset, and rotation numbers.
- Available options for key way per inner diameter is bigger than 6mm. (Refer to page 38)

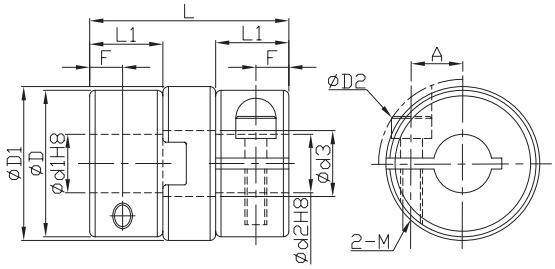


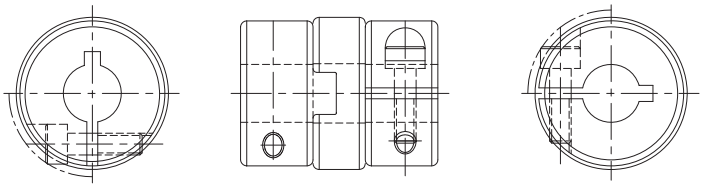


FSCGLK (key way Ød1 side)
FSCGRK (key way Ød2 side)
FSCGWK (key way Ød1 and Ød2 side)

| Component | Material | Accessories |
|---|---|---|
| Main frame | SUS303 | Hexagon Socket Screw |
| Spacer | Aluminum bronze | |

| Dimensions | | Ød1&Ød2 selection *Ød1 ≦ Ød2 | | | | | | | | | | | | | | | ØD | ØD1 | ØD2 | Ød3 | L | L1 | A | F | Clamping screw | |
|---|---|---|---|---|---|---|---|---|---|---|---|---|---|---|---|---|---|---|---|---|---|---|---|---|---|---|
| Model No. | ØD | 4 | 5 | 6 | 6.35 | 7 | 8 | 9.525 | 10 | 11 | 12 | 14 | 15 | 16 | 18 | 20 | | | | | | | | | M | Lock torque (N·m) |
| GOOFSCG | 15 | • | • | • | | | | | | | | | | | | | 14.5 | 15 | 16 | 7.2 | 18.4 | 6.6 | 4.5 | 3.2 | 2.5 | 1.0 |
| | 17 | | • | • | • | | | | | | | | | | | | 16.8 | 17.5 | 19 | 8.2 | 24.4 | 9 | 5 | 4 | 3 | 1.8 |
| | 20 | | | • | • | • | • | • | • | | | | | | | | 20 | 21 | 23 | 9 | 27.2 | 10 | 7 | 4.5 | | |
| | 26 | | | • | • | • | • | • | • | • | • | | | | | | 26 | 27 | 29 | 12 | 30.4 | 11.5 | 8.4 | 5 | 4 | 3.0 |
| | 30 | | | | | | • | | • | | • | • | | | | | 30 | 31 | 32 | 14 | 33 | 12 | 9 | 6 | 4 | 4.5 |
| | 34 | | | | | | | | • | • | • | • | • | • | | | 34 | 35 | 37 | 17 | 34 | 13 | 11 | | 5 | 8.0 |
| | 38 | | | | | | | | • | | • | • | • | • | • | • | 38 | 41 | 41 | 17 | 39.5 | 15 | 13.7 | 7 | | |

★Moment of inertial torque and weight calculated by maximum diameter.

| Specification | | Allowable Wrench Torque (N·m) | Allowable Misalignment | | | Static Torsional Stiffness (N·m/rad) | Max. RPM ($r/min^{-1}$) | ★ Moment of Inertia ($kg·m^2$) | ★ Weight (g) |
|---|---|---|---|---|---|---|---|---|---|
| Model No. | ØD | | Angular (°) | Parallel (mm) | Axial (mm) | | | | |
| GOOFSCG | 15 | 3 | 1.5 | 0.5 | ±0.1 | 800 | 8000 | $6*10^{-7}$ | 17 |
| | 17 | 5 | | 0.5 | ±0.1 | 1000 | 7000 | $1.2*10^{-6}$ | 30 |
| | 20 | 7 | | 0.5 | ±0.1 | 2200 | 6000 | $3*10^{-6}$ | 48 |
| | 26 | 10 | | 0.8 | ±0.2 | 4000 | 5000 | $1*10^{-5}$ | 90 |
| | 30 | 30 | | 1 | ±0.3 | 5500 | 5000 | $2.5*10^{-5}$ | 120 |
| | 34 | 32 | | 1 | ±0.2 | 8000 | 4000 | $4*10^{-5}$ | 172 |
| | 38 | 50 | | 1 | ±0.3 | 11000 | 4000 | $1*10^{-4}$ | 246 |

| Ordering Example: | GOOFSCG26 | - | 10 | * | 12 | - | 100 PCS |
|---|---|---|---|---|---|---|---|
| | Model no. | | Ød1 | | Ød2 | | Q'ty |

## Flexible | Oldham Coupling

# GOOFSMP

- Operating temperature : -40°C~90°C
- Offset of angular, parallel, or axial deviation are individual allowed value, so couple reasons of axial offset appearing at same time would reduce the unit allowable value.
- Available options for key way per inner diameter is bigger than 6mm. (Refer to page 38)

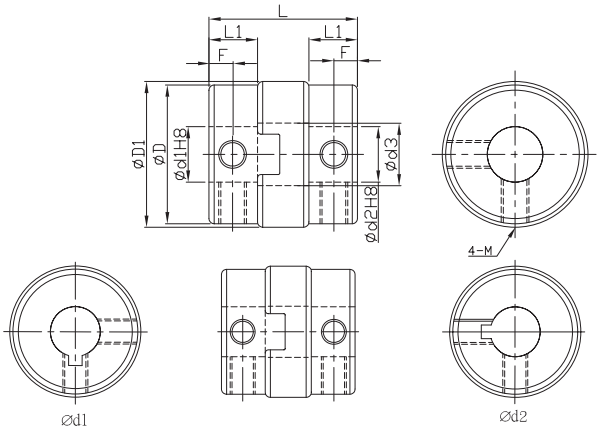


*When Ød1<4 and Ød2>5, there would be 3 set screws.
*When Ød1 and Ød2 both smaller than 4, there would be 2 set screws.

FSMPLK (key way Ød1 side)
FSMPRK (key way Ød2 side)
FSMPWK (key way Ød1 and Ød2 side)

| Component | Material | Accessories |
|---|---|---|
| Main frame | SUS303 | Nylon Set Screw |
| Spacer | Carbon resin | |

| Dimensions | | Ød1&Ød2 selection *Ød1 ≦ Ød2 | | | | | | | | | | | | | | | | | | ØD | ØD1 | Ød3 | L | L1 | F | Set screw | |
|---|---|---|---|---|---|---|---|---|---|---|---|---|---|---|---|---|---|---|---|---|---|---|---|---|---|---|---|
| Model No. | ØD | 1 | 1.5 | 2 | 3 | 4 | 5 | 6 | 6.35 | 7 | 8 | 9.525 | 10 | 11 | 12 | 14 | 15 | 16 | 18 | 20 | | | | | | M | Lock torque (N·m) |
| GOOFSMP | 6 | • | • | • | | | | | | | | | | | | | | | | | 6 | 6.2 | 2.4 | 8.4 | 3 | 1.5 | 1.6 | 0.15 |
| | 8 | • | | • | • | | | | | | | | | | | | | | | | 8 | 8.2 | 3.4 | 9.6 | 3.5 | 1.7 | | |
| | 10 | | | • | • | • | | | | | | | | | | | | | | | 10 | 10.2 | 4.4 | 10.2 | 3.7 | 1.8 | 2 | 0.3 |
| | 12 | | | | • | • | • | | | | | | | | | | | | | | 12 | 12.5 | 4.0 | 14.2 | 5.2 | 2.5 | 3 | 0.7 |
| | 15 | | | | | • | • | • | • | • | • | | | | | | | | | | 14.5 | 15 | 5.0 | 16 | 5.4 | 2.6 | | |
| | 17 | | | | | | • | • | • | • | • | | | | | | | | | | 16.8 | 17.5 | 7.2 | 19.8 | 6.7 | 3.2 | 4 | 1.7 |
| | 20 | | | | | | | • | • | • | • | • | • | • | • | | | | | | 20 | 21 | 8.2 | 21.4 | 7 | 3.4 | | |
| | 26 | | | | | | | • | • | • | • | • | • | • | • | • | | | | | 26 | 27 | 12.0 | 25.6 | 9 | 4 | | |
| | 30 | | | | | | | | | | • | | • | | • | • | | | | | 30 | 31 | 13.0 | 33 | 12 | 6 | | |
| | 34 | | | | | | | | | | | | • | • | • | • | • | • | | | 34 | 35 | 13.0 | 34.2 | 13 | 5.5 | 5 | 4.0 |
| | 38 | | | | | | | | | | | | • | | • | • | • | • | • | • | 38 | 41 | 17.0 | 40 | 15 | 7 | | |

★Moment of inertial torque and weight calculated by maximum diameter.

| Specification | | Allowable Wrench Torque (N·m) | Allowable Misalignment | | | Static Torsional Stiffness (N·m/rad) | Max. RPM ($r/min^{-1}$) | ★ Moment of Inertia ($kg·m^2$) | ★ Weight (g) |
|---|---|---|---|---|---|---|---|---|---|
| Model No. | ØD | | Angular (°) | Parallel (mm) | Axial (mm) | | | | |
| GOOFSMP | 6 | 0.3 | 3 | 0.3 | ±0.25 | 9 | 12000 | $1.5*10^{-8}$ | 1.5 |
| | 8 | 0.5 | | 0.4 | ±0.3 | 13 | | $2.2*10^{-8}$ | 2.5 |
| | 10 | 0.8 | | 0.4 | ±0.32 | 21 | | $3.6*10^{-8}$ | 4 |
| | 12 | 1 | | 0.5 | ±0.35 | 44 | | $1.6*10^{-7}$ | 8 |
| | 15 | 1.6 | | 0.8 | ±0.45 | 90 | 10000 | $3.5*10^{-7}$ | 11 |
| | 17 | 2.2 | | 1 | ±0.55 | 250 | | $7.8*10^{-7}$ | 18 |
| | 20 | 3.2 | | 1.5 | ±0.6 | 340 | 8000 | $1.7*10^{-6}$ | 29 |
| | 26 | 6 | | 2 | | 420 | 6500 | $6.2*10^{-6}$ | 65 |
| | 30 | 15 | | | | 1200 | 6200 | $2*10^{-5}$ | 100 |
| | 34 | 16 | | 2.5 | | 2400 | 6000 | $2.5*10^{-5}$ | 155 |
| | 38 | 28 | | | | 3500 | 5800 | $8*10^{-5}$ | 240 |

| Ordering Example: | GOOFSMP26 | - | 8 | * | 10 | - | 100 PCS |
|---|---|---|---|---|---|---|---|
| | Model no. | | Ød1 | | Ød2 | | Q'ty |

## Flexible | Oldham Coupling

# GOOFSCP

- Operating temperature : -40°C~90°C
- Offset of angular, parallel, or axial deviation are individual allowed value, so couple reasons of axial offset appearing at same time would reduce the unit allowable value.
- FSCP lock torque of clamping screw is 5.4 (N · m) based on shaft dia ( Ød1, Ød2) over Ø16.
- Available options for key way per inner diameter is bigger than 6mm. (Refer to page 38)

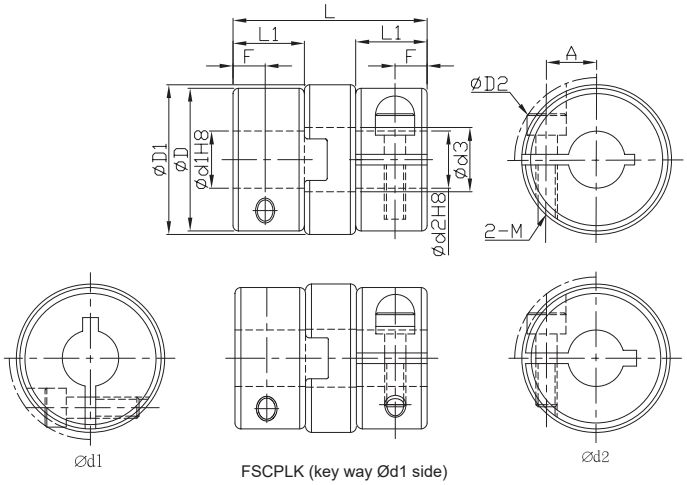


FSCPLK (key way Ød1 side)
FSCPRK (key way Ød2 side)
FSCPWK (key way Ød1 and Ød2 side)

| Component | Material | Accessories |
|---|---|---|
| Main frame | SUS303 | Hexagon Socket Screw |
| Spacer | Carbon resin | |

| Dimensions | | Ød1&Ød2 selection *Ød1 ≦ Ød2 | | | | | | | | | | | | | | | ØD | ØD1 | ØD2 | Ød3 | L | L1 | A | F | Clamping screw | |
|---|---|---|---|---|---|---|---|---|---|---|---|---|---|---|---|---|---|---|---|---|---|---|---|---|---|---|
| Model No. | ØD | 4 | 5 | 6 | 6.35 | 7 | 8 | 9.525 | 10 | 11 | 12 | 14 | 15 | 16 | 18 | 20 | | | | | | | | | M | Lock torque (N·m) |
| GOOFSCP | 15 | • | • | • | | | | | | | | | | | | | 14.5 | 15 | 16 | 5.0 | 18.4 | 6.6 | 4.5 | 3.2 | 2.5 | 1.0 |
| | 17 | | • | • | • | | | | | | | | | | | | 16.8 | 17.5 | 19 | 7.2 | 24.4 | 9 | 5 | 4 | 3 | 1.8 |
| | 20 | | | • | • | • | • | • | • | | | | | | | | 20 | 21 | 23 | 8.2 | 27.2 | 10 | 7 | 4.5 | | |
| | 26 | | | • | • | • | • | • | • | • | • | | | | | | 26 | 27 | 29 | 12 | 30.4 | 11.5 | 8.4 | 5 | 4 | 3.0 |
| | 30 | | | | | | • | | • | | • | • | | | | | 30 | 31 | 32 | 13 | 33 | 12 | 9 | 6 | 4 | 4.5 |
| | 34 | | | | | | | | • | • | • | • | • | • | | | 34 | 35 | 37 | 13 | 34 | 13 | 11 | | 5 | 8.0 |
| | 38 | | | | | | | | • | | • | • | • | • | • | • | 38 | 41 | 41 | 17 | 40 | 15 | 13.7 | 7 | | |

★Moment of inertial torque and weight calculated by maximum diameter.

| Specification | | Allowable Wrench Torque (N·m) | Allowable Misalignment | | | Static Torsional Stiffness (N·m/rad) | Max. RPM ($r/min^{-1}$) | ★ Moment of Inertia ($kg·m^2$) | ★ Weight (g) |
|---|---|---|---|---|---|---|---|---|---|
| Model No. | ØD | | Angular ( ° ) | Parallel (mm) | Axial (mm) | | | | |
| GOOFSCP | 15 | 1.6 | 3 | 0.8 | ±0.45 | 90 | 10000 | $5.0*10^{-7}$ | 15 |
| | 17 | 2.2 | | 1 | ±0.55 | 250 | | $1.0*10^{-6}$ | 28 |
| | 20 | 3.2 | | 1.5 | ±0.6 | 340 | 8000 | $2.4*10^{-6}$ | 40 |
| | 26 | 6 | | 2 | | 420 | 6500 | $8.0*10^{-6}$ | 85 |
| | 30 | 15 | | | | 1200 | 6200 | $2.0*10^{-5}$ | 100 |
| | 34 | 16 | | 2.5 | | 2400 | 6000 | $2.5*10^{-5}$ | 155 |
| | 38 | 18 | | | | 3500 | 5800 | $8.0*10^{-5}$ | 240 |

◎FSMP&FSCP spacer selection, please refer to P.42

| Ordering Example: | GOOFSCP26 | - | 10 | * | 12 | - | 100 PCS |
|---|---|---|---|---|---|---|---|
| | Model no. | | Ød1 | | Ød2 | | Q'ty |

## Flexible | Oldham Coupling

# GOOFAMJ

- Operating temperature : -20°C~80°C
- Offset of angular, parallel, or axial deviation are individual allowed value, so couple reasons of axial offset appearing at same time would reduce the unit allowable value.
- Available options for key way per inner diameter is bigger than 6mm. (Refer to page 39)

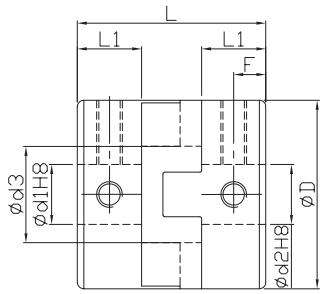


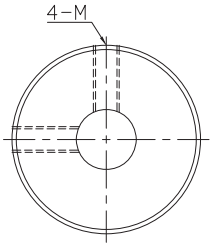


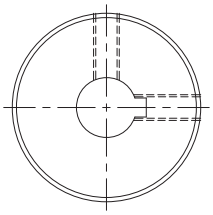


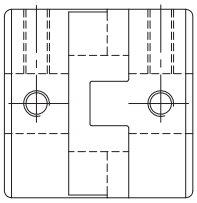

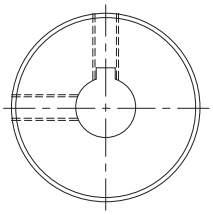


FAMJLK(key way Ød1 side)
FAMJRK (key way Ød2 side)
FAMJWK (key way Ød1 and Ød2 side)

| Component | Material | Surface Finish | Accessories |
|---|---|---|---|
| Main frame | Aluminum Alloy | Anodized | Nylon Set Screw |
| Spacer | Black (POM) | — | |

| Dimensions | | Ød1&Ød2 selection *Ød1 ≦ Ød2 | | | | | | | | | | | | Ød3 | L | L1 | F | Set screw | |
|---|---|---|---|---|---|---|---|---|---|---|---|---|---|---|---|---|---|---|---|
| Model No. | ØD | 14 | 15 | 16 | 18 | 20 | 22 | 25 | 26 | 28 | 30 | 35 | 38 | | | | | M | Lock torque (N·m) |
| GOOFAMJ | 44 | • | • | • | • | • | • | | | | | | | 22.5 | 44 | 15 | 7.5 | 6 | 7.0 |
| | 55 | | | | • | • | • | • | • | | | | | 28 | 55 | 19 | 9.5 | 8 | 15.0 |
| | 70 | | | | | | • | • | | • | • | • | • | 39 | 75 | 25 | 12.5 | 10 | 30.0 |

★Moment of inertial torque and weight calculated by maximum diameter.

| Specification | | Allowable Wrench Torque (N·m) | Allowable Misalignment | | Static Torsional Stiffness (N·m/rad) | Max. RPM ($r/min^{-1}$) | ★ Moment of Inertia ($kg·m^2$) | ★Weight (g) |
|---|---|---|---|---|---|---|---|---|
| Model No. | ØD | | Angular (°) | Parallel (mm) | | | | |
| GOOFAMJ | 44 | 30 | 2 | 1 | 1500 | 12000 | $4*10^{-5}$ | 140 |
| | 55 | 45 | | 1.5 | 2800 | 10000 | $11*10^{-5}$ | 260 |
| | 70 | 80 | | 2 | 4800 | 8000 | $40*10^{-5}$ | 450 |

Ordering Example:

| GOOFAMJ44 | - | 18 | * | 22 | - | 100 PCS |
|---|---|---|---|---|---|---|
| Model no. | | Ød1 | | Ød2 | | Q'ty |

## Flexible | Oldham Coupling

# GOOFACJ

- Operating temperature : -20°C~80°C
- Offset of angular, parallel, or axial deviation are individual allowed value, so couple reasons of axial offset appearing at same time would reduce the unit allowable value.
- Select bigger lock torque of clamping screw than listed values on catalogs when shaft diameter is too small.
- List torque tightness values are only for general standard.
- Available options for key way per inner diameter is bigger than 6mm. (Refer to page 39)

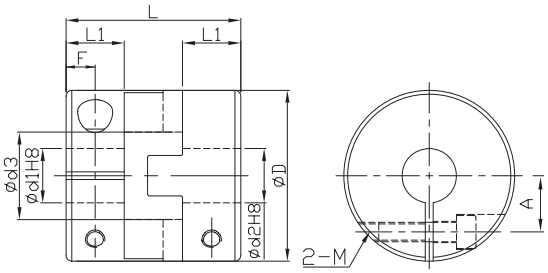


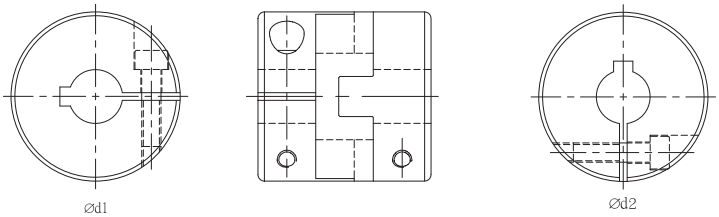


FACJLK (key way Ød1 side)
FACJRK (key way Ød2 side)
FACJWK(key way Ød1 and Ød2 side)

| Component | Material | Surface Finish | Accessories |
|---|---|---|---|
| Main frame | Aluminum Alloy | Anodized | Hexagon Socket Screw |
| Spacer | Black (POM) | – | |

| Dimensions | | Ød1&Ød2 selection *Ød1 ≦ Ød2 | | | | | | | | | | Ød3 | L | L1 | F | A | Clamping screw | |
|---|---|---|---|---|---|---|---|---|---|---|---|---|---|---|---|---|---|---|
| Model No. | ØD | 14 | 15 | 16 | 18 | 20 | 22 | 25 | 28 | 30 | 35 | | | | | | M | Lock torque (N·m) |
| GOOFACJ | 44 | • | • | • | • | • | | | | | | 22.5 | 44 | 15 | 7.5 | 14.5 | 5 | *8.4 |
| | 55 | | | | • | • | • | • | | | | 28 | 55 | 19 | 9.5 | 17 | 6 | *14.4 |
| | 70 | | | | | | • | • | • | • | • | 39 | 75 | 25 | 12.5 | 24 | 8 | *30.0 |

★Moment of inertial torque and weight calculated by maximum diameter.

| Specification | | Allowable Wrench Torque (N·m) | Allowable Misalignment | | Static Torsional Stiffness (N·m/rad) | Max. RPM ($r/min^{-1}$) | ★ Moment of Inertia ($kg·m^2$) | ★ Weight (g) |
|---|---|---|---|---|---|---|---|---|
| Model No. | ØD | | Angular (°) | Parallel (mm) | | | | |
| GOOFACJ | 44 | 26 | 2 | 1 | 1500 | 12000 | $4*10^{-5}$ | 140 |
| | 55 | 40 | | 1.5 | 2800 | 10000 | $11*10^{-5}$ | 260 |
| | 70 | 72 | | 2 | 4800 | 8000 | $40*10^{-5}$ | 450 |

◎FAMJ&FACJ spacer selection, please refer to P.43

| Ordering Example: | GOOFACJ44 | - | 16 | * | 18 | - | 100 PCS |
|---|---|---|---|---|---|---|---|
| | Model no. | | Ød1 | | Ød2 | | Q'ty |

## Flexible | Oldham Coupling

# GOOFACPL

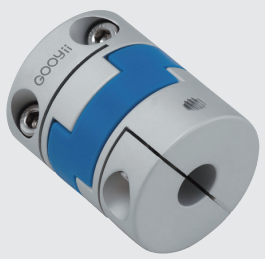

- Operating temperature : -20°C~80°C
- Offset of angular, parallel, or axial deviation are individual allowed value, so couple reasons of axial offset appearing at same time would reduce the unit allowable value.

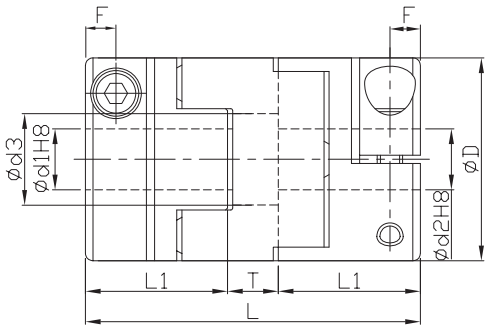


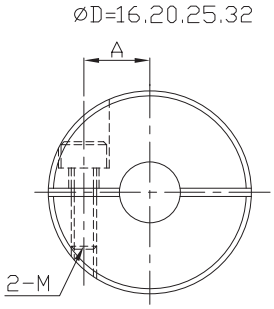


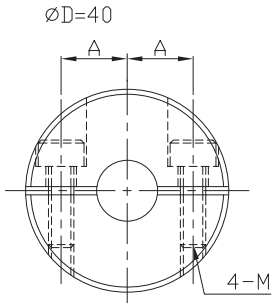


| Component | Material | Surface Finish | Accessories |
|---|---|---|---|
| Main frame | Aluminum Alloy | Anodized | Hexagon Socket Screw |
| Spacer | (POM) | — | |

| Dimensions | | Ød1&Ød2 selection *Ød1 ≦ Ød2 | | | | | | | | | | | | | Ød3 | L | L1 | T | F | A | Clamping screw Set screw | |
|---|---|---|---|---|---|---|---|---|---|---|---|---|---|---|---|---|---|---|---|---|---|---|
| Model No. | ØD | 4 | 5 | 6 | 6.35 | 7 | 8 | 9.525 | 10 | 11 | 12 | 14 | 15 | 16 | | | | | | | M | Lock torque (N·m) |
| GOOFACPL | 16 | • | • | • | | | | | | | | | | | 7 | 29 | 13 | 3 | 3 | 5 | 2.5 | 1 |
| | 20 | | • | • | • | • | • | | | | | | | | 9 | 33 | 14 | 5 | | 6.5 | | |
| | 25 | | | • | • | • | • | • | • | | | | | | 11 | 39 | 17 | 5 | 3.8 | 9 | 3 | 1.5 |
| | 32 | | | | | | • | • | • | • | • | • | | | 14.5 | 45 | 19 | 7 | 4.5 | 11 | 4 | 2.5 |
| | 40 | | | | | | | | | | • | • | • | • | 17 | 50 | 23 | 4 | 7 | 13 | 5 | 4 |

★Moment of inertial torque and weight calculated by maximum diameter.

| Specification | | Allowable Wrench Torque (N·m) | Allowable Misalignment | | Static Torsional Stiffness (N·m/rad) | Max. RPM ($r/min^{-1}$) | ★ Moment of Inertia ($kg·m^2$) | ★ Weight (g) |
|---|---|---|---|---|---|---|---|---|
| Model No. | ØD | | Angular ( ° ) | Parallel (mm) | | | | |
| GOOFACPL | 16 | 0.7 | 3 | 1.0 | 31 | 9500 | $5.8*10^{-7}$ | 12 |
| | 20 | 1.2 | | 1.5 | 60 | 7600 | $1.5*10^{-6}$ | 19 |
| | 25 | 2 | | 2.0 | 140 | 6100 | $4.4*10^{-6}$ | 36 |
| | 32 | 4.5 | | 2.5 | 280 | 4800 | $1.4*10^{-5}$ | 69 |
| | 40 | 9 | | 3.0 | 540 | 3800 | $4.1*10^{-5}$ | 130 |

| Ordering Example: | GOOFACPL16 | - | 8 | * | 10 | - | 100 PCS |
|---|---|---|---|---|---|---|---|
| | Model no. | | Ød1 | | Ød2 | | Q'ty |

## Flexible | Oldham Coupling

# GOOFACPS

- Operating temperature : -20°C~80°C
- Offset of angular, parallel, or axial deviation are individual allowed value, so couple reasons of axial offset appearing at same time would reduce the unit allowable value.

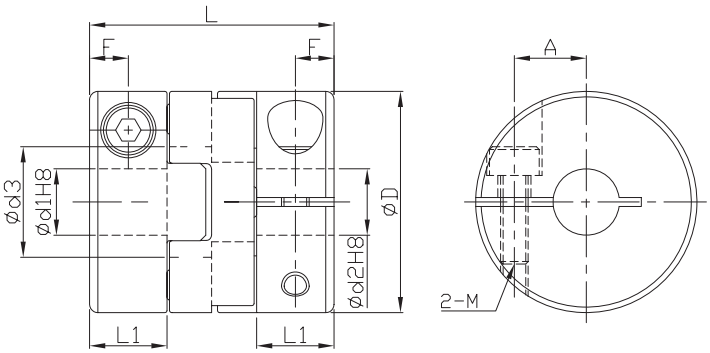


| Component | Material | Surface Finish | Accessories |
|---|---|---|---|
| Main frame | Aluminum Alloy | Anodized | Hexagon Socket Screw |
| Spacer | (POM) | — | |

| Dimensions | | Ød1&Ød2 selection *Ød1 ≦ Ød2 | | | | | | | | | | | | Ød3 | L | L1 | F | A | Clamping screw Set screw | |
|---|---|---|---|---|---|---|---|---|---|---|---|---|---|---|---|---|---|---|---|---|
| Model No. | ØD | 3 | 4 | 5 | 6 | 6.35 | 7 | 8 | 9.525 | 10 | 11 | 12 | 14 | | | | | | M | Lock torque (N·m) |
| GOOFACPS | 12 | • | • | • | | | | | | | | | | 6 | 14.9 | 5 | 2.5 | 4 | 2 | 0.5 |
| | 16 | • | • | • | • | | | | | | | | | 8 | 21 | 7 | 3.5 | 5 | 2.5 | 1 |
| | 20 | | | • | • | • | • | • | | | | | | 10 | 22 | | | 6.5 | | |
| | 25 | | | | | • | • | • | • | • | | | | 14 | 27.2 | 8 | 4 | 9 | 3 | 1.5 |
| | 32 | | | | | | • | • | • | • | • | • | • | 18 | 33.3 | 10 | 5 | 11 | 4 | 2.5 |

★Moment of inertial torque and weight calculated by maximum diameter.

| Specification | | Allowable Wrench Torque (N·m) | Allowable Misalignment | | Static Torsional Stiffness (N·m/rad) | Max. RPM ($r/min^{-1}$) | ★ Moment of Inertia ($kg·m^2$) | ★ Weight (g) |
|---|---|---|---|---|---|---|---|---|
| Model No. | ØD | | Angular (°) | Parallel (mm) | | | | |
| GOOFACPS | 12 | 0.2 | 2 | 0.6 | 9 | 13000 | $7.1*10^{-8}$ | 3 |
| | 16 | 0.4 | | 1.0 | 30 | 9500 | $3*10^{-7}$ | 8 |
| | 20 | 0.7 | | 1.3 | 47 | 7600 | $7.4*10^{-7}$ | 13 |
| | 25 | 1.2 | | 1.5 | 85 | 6100 | $2.2*10^{-6}$ | 24 |
| | 32 | 2.8 | | 2.0 | 190 | 4800 | $7.3*10^{-6}$ | 48 |

◎ FACPL&FACPS spacer selection, please refer to P.44

| Ordering Example: | GOOFACPS25 | - | 8 | * | 10 | - | 100 PCS |
|---|---|---|---|---|---|---|---|
| | Model no. | | Ød1 | | Ød2 | | Q'ty |

## Flexible | Oldham Coupling

# GOOFAMN

- Operating temperature : -20°C~80°C
- Offset of angular, parallel, or axial deviation are individual allowed value, so couple reasons of axial offset appearing at same time would reduce the unit allowable value.

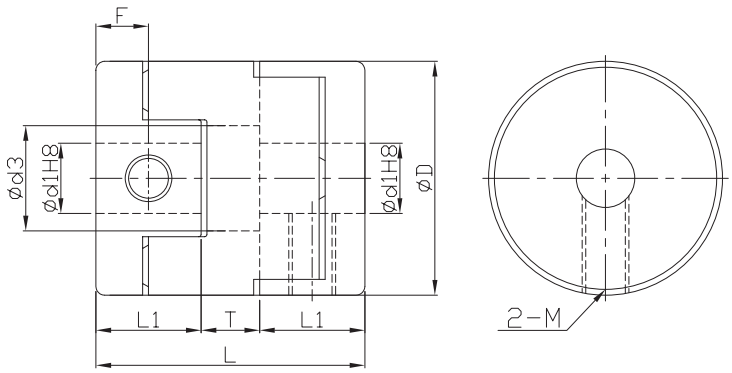


| Component | Material | Surface Finish | Accessories |
|---|---|---|---|
| Main frame | Aluminum Alloy | Anodized | Nylon Set Screw |
| Spacer | (POM) | – | |

| Dimensions | | Ød1&Ød2 selection *Ød1 ≦ Ød2 | | | | | | | | | | | | | | Ød3 | L | L1 | T | F | Clamping screw Set screw | |
|---|---|---|---|---|---|---|---|---|---|---|---|---|---|---|---|---|---|---|---|---|---|---|
| Model No. | ØD | 3 | 4 | 5 | 6 | 6.35 | 7 | 8 | 9.525 | 10 | 11 | 12 | 14 | 15 | 16 | | | | | | M | Lock torque (N·m) |
| GOOFAMN | 16 | • | • | • | • | • | | | | | | | | | | 7 | 18 | 7 | 4 | 3.5 | 3 | 0.7 |
| | 20 | | • | • | • | • | • | • | | | | | | | | 9 | 23 | 9 | 5 | 4.5 | 4 | 1.7 |
| | 25 | | | • | • | • | • | • | • | • | | | | | | 11 | 28 | 11 | 6 | 5.5 | 5 | 4 |
| | 32 | | | | | | | • | • | • | • | • | • | | | 14.5 | 33 | 13 | 7 | 6.5 | 6 | 7 |
| | 40 | | | | | | | • | • | • | • | • | • | • | • | 17 | 32 | 14 | 4 | 7 | | |

★Moment of inertial torque and weight calculated by maximum diameter.

| Specification | | Allowable Wrench Torque (N·m) | Allowable Misalignment | | Static Torsional Stiffness (N·m/rad) | Max. RPM ($r/min^{-1}$) | ★ Moment of Inertia ($kg·m^2$) | ★ Weight (g) |
|---|---|---|---|---|---|---|---|---|
| Model No. | ØD | | Angular ( ° ) | Parallel (mm) | | | | |
| GOOFAMN | 16 | 0.7 | 3 | 1.0 | 31 | 9500 | $3.2*10^{-7}$ | 7 |
| | 20 | 1.2 | | 1.5 | 60 | 7600 | $1.0*10^{-6}$ | 14 |
| | 25 | 2 | | 2.0 | 140 | 6100 | $3.0*10^{-6}$ | 27 |
| | 32 | 4.5 | | 2.5 | 280 | 4800 | $9.5*10^{-6}$ | 50 |
| | 40 | 9 | | 3.0 | 540 | 3800 | $2.3*10^{-5}$ | 80 |

◎FAMN spacer selection, please refer to P.44

| Ordering Example: | GOOFAMN25 | - | 6 | * | 8 | - | 100 PCS |
|---|---|---|---|---|---|---|---|
| | Model no. | | Ød1 | | Ød2 | | Q'ty |

# GOOFS-PC

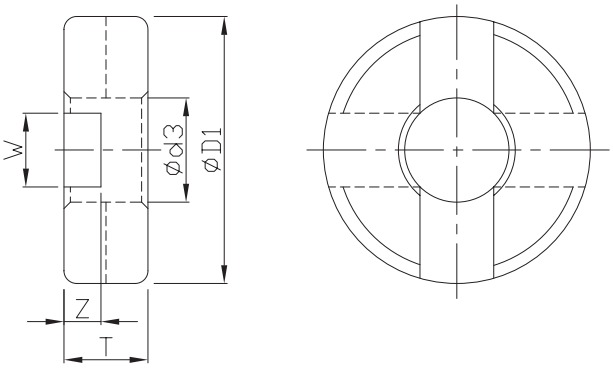


◆ Spacer

Material：carbon resin

| Dimensions | | ØD1 | T | Ød3 | W | Z | Coupling |
|---|---|---|---|---|---|---|---|
| Model No. | ØD | | | | | | |
| GOOFS-PC | 6 | 6.2 | 2.2 | 2.4 | 1.3 | 1.3 | FSMP6 |
| | 8 | 8.2 | 2.4 | 3.4 | 1.6 | 1.5 | FSMP8 |
| | 10 | 10.2 | 2.6 | 4.4 | 1.6 | 1.6 | FSMP10 |
| | 12 | 12.5 | 3.8 | 4.0 | 3 | 1.8 | FSMP12 |
| | 15 | 15 | 4.8 | 5.0 | 3.4 | 2.3 | FSMP15<br>FSCP15 |
| | 17 | 17.5 | 6 | 7.2 | 4.6 | 2.9 | FSMP17<br>FSCP17 |
| | 20 | 21 | 6.6 | 8.2 | 5.8 | 3.2 | FSMP20<br>FSCP20 |
| | 26 | 27 | 7 | 12.0 | 7 | 4 | FSMP26<br>FSCP26 |
| | 30 | 31 | 8.5 | 13.0 | 7 | 4 | FSMP30<br>FSCP30 |
| | 34 | 35 | 7 | 13.0 | 7 | 4 | FSMP34<br>FSCP34 |
| | 38 | 41 | 9.5 | 16.0 | 7 | 4 | FSMP38<br>FSCP38 |

◆ W dimension is made in strict standard, and inter-inlaid adjustment.

| Ordering Example: | FS-PC | 26 |
|---|---|---|
| | Model no. | ØD |

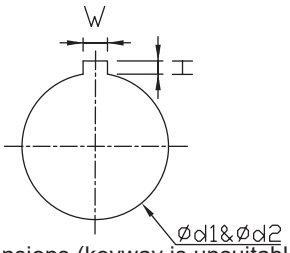


◆ Key way dimensions (keyway is unsuitable for flexible coupling-spiral beam type & rigidity coupling)

| Shaft dia. Ød1・Ød2 | w | | H | | Key dimensions W*H |
|---|---|---|---|---|---|
| | Datum dimension | Allowable Tolerance | Datum dimension | Allowable tolerance | |
| 6~7.9 | 2 | ±0.0125 | 1.0 | +0.1<br>0 | 2*2 |
| 8~10 | 3 | | 1.4 | | 3*3 |
| 10.1~12 | 4 | ±0.0150 | 1.8 | | 4*4 |
| 12.1~17 | 5 | | 2.3 | | 5*5 |
| 17.1~20 | 6 | | 2.8 | | 6*6 |

## Oldham Spacer | Black POM

GOOFS-PP

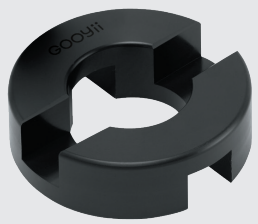

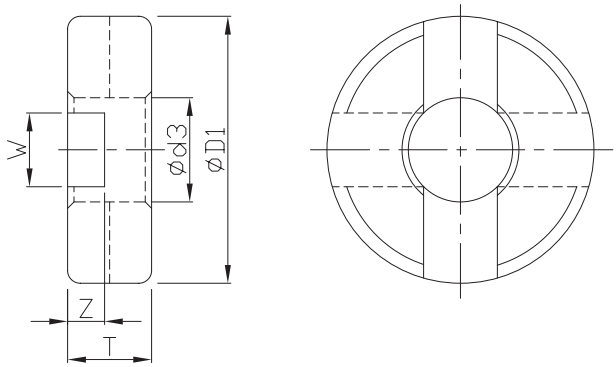


### ◆ Spacer

Material : Polyacetel (POM)

| Dimensions | | ØD1 | T | Ød3 | W | Z | Coupling |
|---|---|---|---|---|---|---|---|
| Model No. | ØD | | | | | | |
| GOOFS-PP | 44 | 44.3 | 14 | 22.5 | 10.4 | 9 | FAMJ44<br>FACJ44 |
| | 55 | 55 | 17 | 28 | 13 | 11 | FAMJ55<br>FACJ55 |
| | 70 | 69 | 25 | 39 | 15 | 16.5 | FAMJ70<br>FACJ70 |

| Ordering Example: | FS-PP | 44 |
|---|---|---|
| | Model no. | ØD |

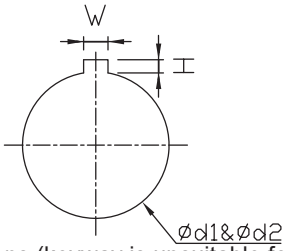


### ◆ Key way dimensions (keyway is unsuitable for flexible coupling-spiral beam type & rigidity coupling)

| Shaft dia. Ød1・Ød2 | W | | H | | Key dimensions W*H |
|---|---|---|---|---|---|
| | Datum dimension | Allowable tolerance | Datum dimension | Allowable tolerance | |
| 14~17 | 5 | ±0.0150 | 2.3 | +0.1<br>0 | 5*5 |
| 17.1~22 | 6 | | 2.8 | | 6*6 |
| 22.1~30 | 8 | ±0.0180 | 3.3 | +0.2<br>0 | 8*7 |
| 30.1~42 | 10 | | | | 10*8 |

Oldham Spacer | Black POM



## GOOFA-PB

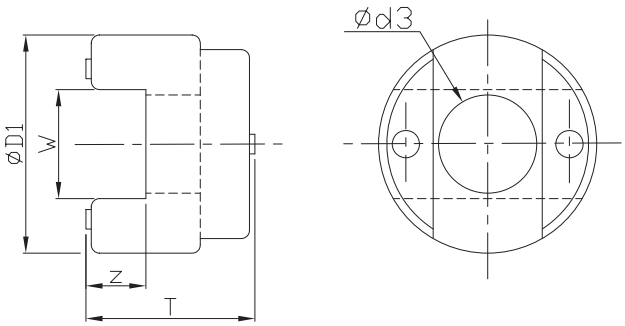


◆ Spacer

Material : Polycetal (POM)

| Dimensions | | ØD1 | T | Ød3 | W | Z | Coupling |
|---|---|---|---|---|---|---|---|
| Model No. | ØD | | | | | | |
| GOOFA-PB | 16 | 16 | 12 | 7 | 8 | 4.5 | FAMN16<br>FACPL16 |
| | 20 | 20 | 15 | 9 | 10 | 5.5 | FAMN20<br>FACPL20 |
| | 25 | 25 | 18 | 11 | 12 | 6.5 | FAMN25<br>FACPL25 |
| | 32 | 32 | 21 | 14.5 | 15 | 7.5 | FAMN32<br>FACPL32 |
| | 40 | 40 | 18 | 17 | 19 | 7.5 | FAMN40<br>FACPL40 |

| Ordering Example: | FA-PB | 32 |
|---|---|---|
| | Model no. | ØD |

## GOOFA-PG

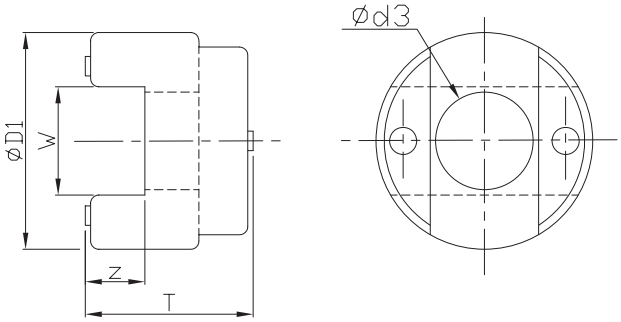


◆ Spacer

Material : Polycetal (POM)

| Dimensions | | ØD1 | T | Ød3 | W | Z | Coupling |
|---|---|---|---|---|---|---|---|
| Model No. | ØD | | | | | | |
| GOOFA-PG | 12 | 12 | 4.9 | 6 | 4 | 2.5 | FACPS12 |
| | 16 | 16 | 7 | 8 | 5 | 3.5 | FACPS16 |
| | 20 | 20 | 8 | 10 | 7 | 4 | FACPS20 |
| | 25 | 25 | 11.2 | 14 | 9 | 5.5 | FACPS25 |
| | 32 | 32 | 13.3 | 18 | 10 | 6.5 | FACPS32 |

| Ordering Example: | GOOFA-PG | 32 |
|---|---|---|
| | Model no. | ØD |

## Flexible | Jaw Coupling

# GOOFAME

(B)

(W)

(R)

- Operating temperature : -20°C~60°C
- Offset of angular, parallel, or axial deviation are individual allowed value, so couple reasons of axial offset appearing at same time would reduce the unit allowable value.

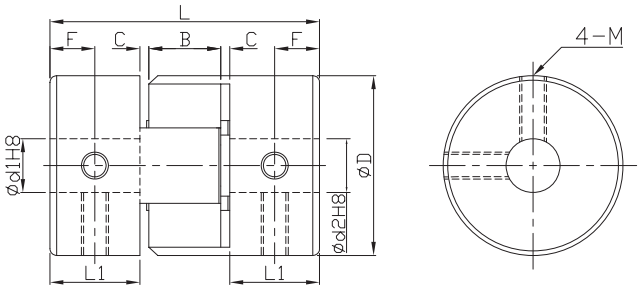


FAME ØD=14,20,30

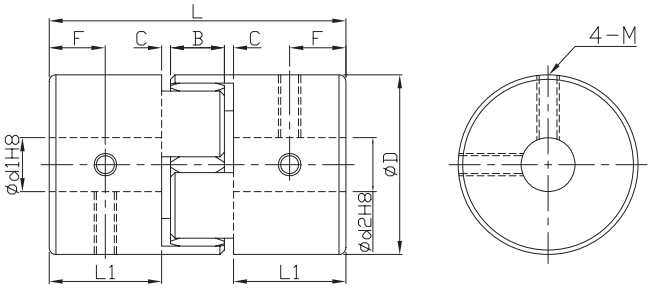


FAME ØD=40

| Component | Material | Surface Finish | Accessories |
|---|---|---|---|
| Main frame | Aluminum Alloy | Anodized | Lylon Set Screw |
| Spider | TPEE | — | |

★ Dimension "C", must be previously reserved while assemly by users, otherwise it would affect allowed deflection, accelerating shaft and coupling damage.

| Dimensions | | Spider (color selection) | Ød1&Ød2 selection *Ød1 ≦ Ød2 | | | | | | | | | | | | | | L | L1 | B | C | F | Set screw | |
|---|---|---|---|---|---|---|---|---|---|---|---|---|---|---|---|---|---|---|---|---|---|---|---|
| Model No. | ØD | | 3 | 4 | 5 | 6 | 6.35 | 7 | 8 | 9.525 | 10 | 11 | 12 | 14 | 15 | 16 | | | | | | M | Lock torque (N·m) |
| GOOFAME | 14 | B（Blue） | • | • | • | • | | | | | | | | | | | 22 | 7 | 6 | 1 | 3.5 | 3 | 0.7 |
| | 20 | W（White） | | | • | • | • | • | • | • | | | | | | | 30 | 10 | 8 | | 5 | | |
| | 30 | R（Red） | | | | | | • | • | • | • | • | • | • | | | 35 | 11 | 10 | 1.5 | 5.5 | 4 | 1.7 |
| | 40 | | | | | | | | | | • | • | • | • | • | • | 66 | 25 | 12 | 2 | 12.5 | 5 | 4 |

★Moment of inertial torque and weight calculated by maximum diameter.

| Specification | | Allowable Wrench Torque (N·m) | | | Allowable Misalignment | | | | | Static Torsional Stiffness (N·m/rad) | | | Max. RPM (r/min$^{-1}$) | ★ Moment of Inertia (kg·m$^2$) | ★ Weight (g) |
|---|---|---|---|---|---|---|---|---|---|---|---|---|---|---|---|
| | | | | | Angular (°) | Parallel (mm) | | | Axial (mm) | | | | | | |
| Model No. | ØD | B | W | R | | B | W | R | | B | W | R | | | |
| GOOFAME | 14 | 0.7 | 1.2 | 2 | 1.0 | 0.15 | 0.10 | 0.10 | +0.6 0 | 8 | 14 | 22 | 27000 | $2.1*10^{-7}$ | 7.3 |
| | 20 | 1.8 | 3 | 5 | | 0.20 | 0.15 | | +0.8 0 | 16 | 29 | 55 | 19000 | $1.0*10^{-6}$ | 18 |
| | 30 | 4 | 7.5 | 12.5 | | 0.20 | 0.15 | | +1.0 0 | 46 | 73 | 130 | 13000 | $5.9*10^{-6}$ | 46 |
| | 40 | 4.9 | 10 | 17 | | 0.15 | 0.10 | | +1.2 0 | 380 | 570 | 1200 | 9600 | $4.0*10^{-5}$ | 150 |

| Ordering Example: | GOOFAME30 | - | 10 | * | 12 | - | 100 PCS |
|---|---|---|---|---|---|---|---|
| | Model no. | | Ød1 | | Ød2 | | Q'ty |

## Flexible | Jaw Coupling

# GOOFAMK

(B)

(W)

(R)

- Operating temperature : -20°C~60°C
- Offset of angular, parallel, or axial deviation are individual allowed value, so couple reasons of axial offset appearing at same time would reduce the unit allowable value.

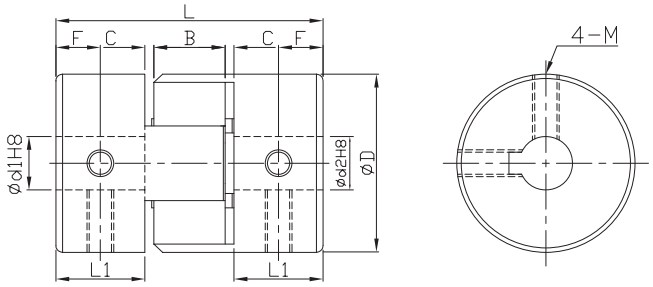


FAMK ØD=30

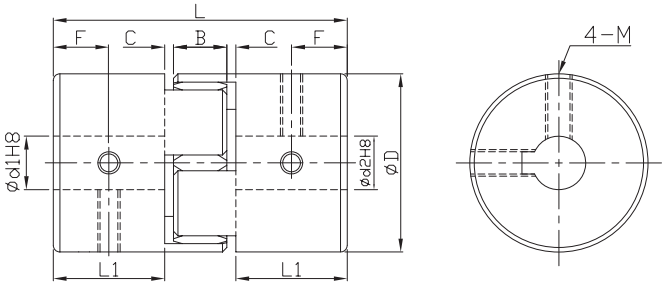


FAMK ØD=40

| Component | Material | Surface Finish | Accessories |
|---|---|---|---|
| Main frame | Aluminum Alloy | Anodized | Lylon Set Screw |
| Spider | TPEE | — | |

★ Dimension "C", must be previously reserved while assemly by users, otherwise it would affect allowed deflection, accelerating shaft and coupling damage.

| Dimensions | | Spider (color selection) | Ød1&Ød2 selection *Ød1 ≦ Ød2 | | | | | | L | L1 | B | C | F | Set screw | |
|---|---|---|---|---|---|---|---|---|---|---|---|---|---|---|---|
| Model No. | ØD | | 10 | 11 | 12 | 14 | 15 | 16 | | | | | | M | Lock torque (N·m) |
| GOOFAMK | 30 | B (Blue) W (White) | • | • | • | • | | | 35 | 11 | 10 | 1.5 | 5.5 | 4 | 1.7 |
| | 40 | R (Red) | • | • | • | • | • | • | 66 | 25 | 12 | 2 | 12.5 | 5 | 4 |

★Moment of inertial torque and weight calculated by maximum diameter.

| Specification | | Allowable Wrench Torque (N·m) | | | Allowable Misalignment | | | | | Static Torsional Stiffness (N·m/rad) | | | Max. RPM ($r/min^{-1}$) | ★ Moment of Inertia ($kg·m^2$) | ★ Weight (g) |
|---|---|---|---|---|---|---|---|---|---|---|---|---|---|---|---|
| | | | | | Angular (°) | Parallel (mm) | | | Axial (mm) | | | | | | |
| Model No. | ØD | B | W | R | | B | W | R | | B | W | R | | | |
| GOOFAMK | 30 | 4 | 7.5 | 12.5 | 1.0 | 0.20 | 0.15 | 0.10 | +1.00 0 | 46 | 73 | 130 | 5100 | $5.8*10^{-6}$ | 45 |
| | 40 | 4.9 | 10 | 17 | | 0.15 | 0.10 | | +1.20 0 | 380 | 570 | 1200 | 3800 | $3.8*10^{-5}$ | 150 |

◎FAME&FAMK spider selection and installation remark please refer to P.51

| Ordering Example: | GOOFAMK30 | - | 12 | * | 14 | - | 100 PCS |
|---|---|---|---|---|---|---|---|
| | Model no. | | Ød1 | | Ød2 | | Q'ty |

## Flexible | Jaw Coupling

### GOOFACE

(B)

(W)

(R)

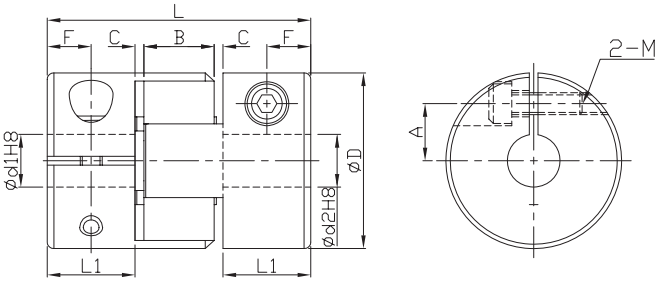


FACE ØD=14,20,30

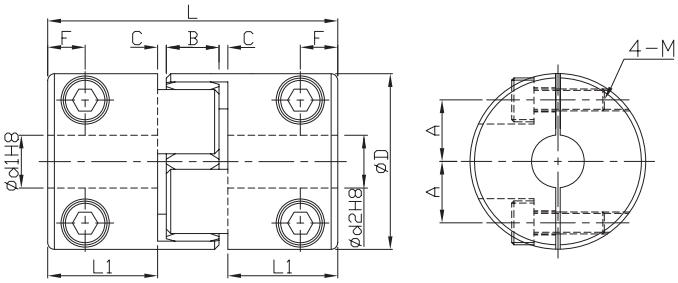


FACE ØD=40

- Operating temperature : -20°C~60°C
- Offset of angular, parallel, or axial deviation are individual allowed value, so couple reasons of axial offset appearing at same time would reduce the unit allowable value.

| Component | Material | Surface Finish | Accessories |
|---|---|---|---|
| Main frame | Aluminum Alloy | Anodized | Hexagon Socket Screw |
| Spider | TPEE | — | |

★ Dimension "C", must be previously reserved while assemly by users, otherwise it would affect allowed deflection, accelerating shaft and coupling damage.

| Dimensions | | Spider (color selection) | Ød1&Ød2 selection *Ød1 ≦ Ød2 | | | | | | | | | | | | | | L | L1 | B | C | F | A | Clamping screw | |
|---|---|---|---|---|---|---|---|---|---|---|---|---|---|---|---|---|---|---|---|---|---|---|---|---|
| Model No. | ØD | | 3 | 4 | 5 | 6 | 6.35 | 7 | 8 | 9.525 | 10 | 11 | 12 | 14 | 15 | 16 | | | | | | | M | Lock torque (N·m) |
| GOOFACE | 14 | B（Blue） | • | • | • | | | | | | | | | | | | 22 | 7 | 6 | 1 | 3.5 | 4 | 2 | 0.5 |
| | 20 | W（White） | | | • | • | • | • | • | | | | | | | | 30 | 10 | 8 | | 5 | 6.5 | 2.5 | 1 |
| | 30 | | | | | | | • | • | • | • | • | • | | | | 35 | 11 | 10 | 1.5 | 5.5 | 10 | 4 | 2.5 |
| | 40 | R（Red） | | | | | | | | | • | • | • | • | • | • | 66 | 25 | 12 | 2 | 8.5 | 14 | 5 | 4 |

★Moment of inertial torque and weight calculated by maximum diameter.

| Specification | | Allowable Wrench Torque (N·m) | | | Allowable Misalignment | | | | | Static Torsional Stiffness (N·m/rad) | | | Max. RPM (r/min$^{-1}$) | ★ Moment of Inertia (kg·m$^2$) | ★ Weight (g) |
|---|---|---|---|---|---|---|---|---|---|---|---|---|---|---|---|
| | | | | | Angular (°) | Parallel (mm) | | | Axial (mm) | | | | | | |
| Model No. | ØD | B | W | R | | B | W | R | | B | W | R | | | |
| GOOFACE | 14 | 0.7 | 1.2 | 2 | 1.0 | 0.15 | 0.10 | 0.10 | +0.6 / 0 | 8 | 14 | 22 | 11000 | $1.6*10^{-7}$ | 6 |
| | 20 | 1.8 | 3 | 5 | | 0.20 | 0.15 | | +0.8 / 0 | 16 | 29 | 55 | 7600 | $1.1*10^{-6}$ | 19 |
| | 30 | 4 | 7.5 | 12.5 | | 0.20 | 0.15 | | +1.0 / 0 | 46 | 73 | 130 | 5100 | $6.2*10^{-6}$ | 50 |
| | 40 | 4.9 | 10 | 17 | | 0.15 | 0.10 | | +1.2 / 0 | 380 | 570 | 1200 | 3800 | $3.9*10^{-5}$ | 160 |

| Ordering Example: | GOOFACE14 | - | 10 | * | 12 | - | 100 PCS |
|---|---|---|---|---|---|---|---|
| | Model no. | | Ød1 | | Ød2 | | Q'ty |

## Flexible | Jaw Coupling



# GOOFACK

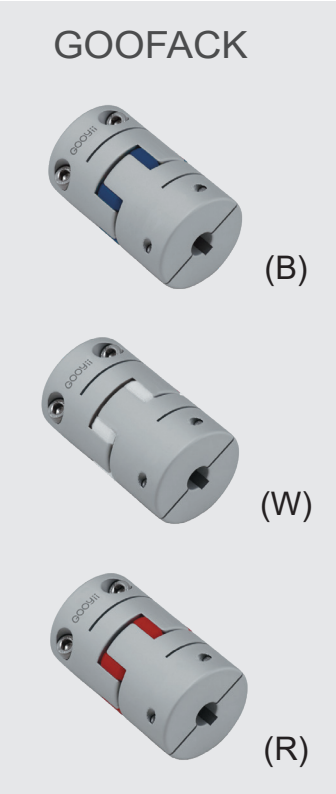


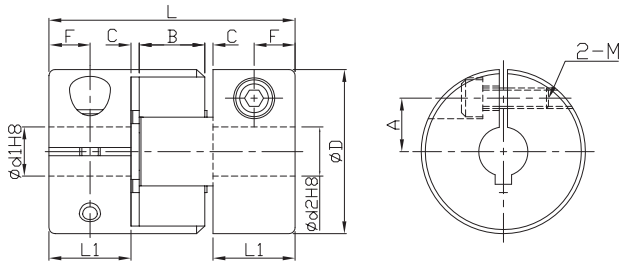


FACK ØD=14.20.30

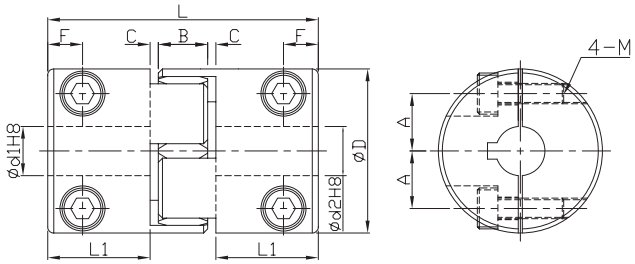


FACK ØD=40

- Operating temperature : -20°C~60°C
- Offset, deflection, shaft deviation are individual allowed values, so axial offsets in all reasons appearing at same time would reduce values.

| Component | Material | Surface Finish | Accessories |
|---|---|---|---|
| Main frame | Aluminum Alloy | Anodized | Hexagon Socket Screw |
| Spider | TPEE | — | |

★ Dimension "C", must be previously reserved while assemly by users, otherwise it would affect allowed deflection, accelerating shaft and coupling damage.

| Dimensions | | Spider (color selection) | Ød1&Ød2 selection *Ød1 ≦ Ød2 | | | | | | L | L1 | B | C | F | A | Clamping screw | |
|---|---|---|---|---|---|---|---|---|---|---|---|---|---|---|---|---|
| Model No. | ØD | | 10 | 11 | 12 | 14 | 15 | 16 | | | | | | | M | Lock torque (N·m) |
| GOOFACK | 30 | B（Blue）<br>W（White）<br>R（Red） | • | • | • | | | | 35 | 11 | 10 | 1.5 | 5.5 | 10 | 4 | 2.5 |
| | 40 | | • | • | • | • | • | • | 66 | 25 | 12 | 2 | 8.5 | 14 | 5 | 4 |

★Moment of inertial torque and weight calculated by maximum diameter.

| Specification | | Allowable Wrench Torque (N·m) | | | Allowable Misalignment | | | | | Static Torsional Stiffness (N·m/rad) | | | Max. RPM ($r/min^{-1}$) | ★ Moment of Inertia ($kg·m^2$) | ★ Weight (g) |
|---|---|---|---|---|---|---|---|---|---|---|---|---|---|---|---|
| | | | | | Angular (°) | Parallel (mm) | | | Axial (mm) | | | | | | |
| Model No. | ØD | B | W | R | | B | W | R | | B | W | R | | | |
| GOOFACK | 30 | 4 | 7.5 | 12.5 | 1.0 | 0.20 | 0.15 | 0.10 | +1.0<br>0 | 46 | 73 | 130 | 5100 | $4.2*10^{-6}$ | 50 |
| | 40 | 4.9 | 10 | 17 | | 0.15 | 0.10 | | +1.2<br>0 | 380 | 570 | 1200 | 3800 | $3.7*10^{-5}$ | 160 |

◎FACE&FACK spider selection and installation remark please refer to P.51

| Ordering Example: | GOOFACK30 - | 10 * | 12 - | 100 PCS |
|---|---|---|---|---|
| | Model no. | Ød1 | Ød2 | Q'ty |

## Flexible | Jaw Coupling

# GOOFACE

(W)

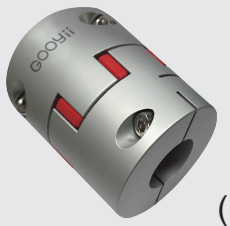

(R)

- Operating temperature : -20°C~90°C
- Offset of angular, parallel, or axial deviation are individual allowed value, so couple reasons of axial offset appearing at same time would reduce the unit allowable value.
- Key way available on request per indicated as LK(Ød1 bore), RK(Ød2 bore), WK(Ød1.Ød2 bore)

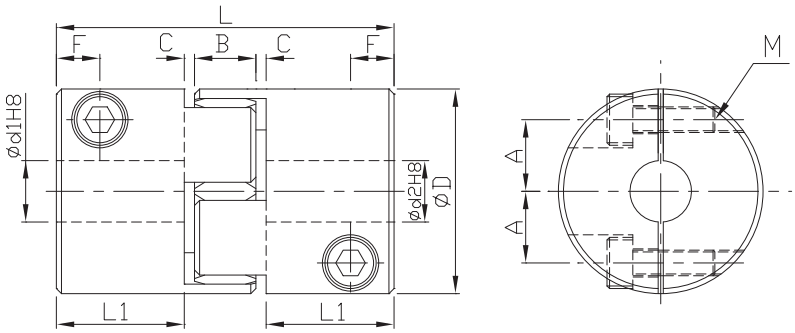


FACE D=55,65,80

| Component | Material | Surface Finish | Accessories |
|---|---|---|---|
| Main frame | Aluminum Alloy | Anodized | Hexagon Socket Screw |
| Spider | TPEE | — | |

| Size | | Spider Elestic strength (Color) | Ød1&Ød2 selection* Ød1≦Ød2 | | | | | | | L | L1 | B | C | F | A | Clamping screw | |
|---|---|---|---|---|---|---|---|---|---|---|---|---|---|---|---|---|---|
| Model | ØD | | 16 | 20 | 24 | 32 | 35 | 40 | 42 | | | | | | | M | Lock Torque (N·m) |
| GOOFACE | 55 | 92sh A(W) 98sh A(R) | • | • | • | | | | | 78 | 30 | 14 | 2 | 10.5 | 20 | M6 | 10.5 |
| | 65 | | • | • | • | • | • | | | 90 | 35 | 15 | 2.5 | 11.5 | 25 | M8 | 25 |
| | 80 | | • | • | • | • | • | • | • | 114 | 45 | 18 | 3 | 15.5 | 25 | M8 | 30 |

★Moment of inertial torque and weight calculated by maximum diameter.

| Specifications | | Allowable Torque (N·m) | | Allowable Angle Mis-alignment | Allowable Parallel Mis-alignment (mm) | | Allowable Axile Mis-alignment (mm) | Static torsional stiffness (N·m/rad) | | Max. RPM ($r/min^{-1}$) | Moment of inertia (kg·m) | Weight (g) |
|---|---|---|---|---|---|---|---|---|---|---|---|---|
| Model | ØD | R | W | | R | W | | R | W | | | |
| GOOFACE | 55 | 60 | 35 | 0.9° | 0.1 | 0.1 | 1.2 | 2600 | 1600 | 8650 | $1.6*10^{-4}$ | 330 |
| | 65 | 160 | 95 | | | | 1.2 | 4900 | 3000 | 7350 | $3.8*10^{-4}$ | 560 |
| | 80 | 325 | 190 | | | | 1.2 | 6500 | 5300 | 5950 | $1.0*10^{-3}$ | 560 |

| Ordering Example: | GOOFACE65 | - | 24 | * | 55 | - | 100 PCS |
|---|---|---|---|---|---|---|---|
| | Model no. | | Ød1 | | Ød2 | | Q'ty |

# GOOFASE

(W)

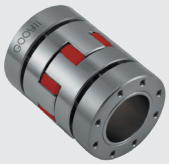

(R)

- Operating temperature：-20˚C~90˚C
- Offset of angular, parallel, or axial deviation are individual allowed value, so couple reasons of axial offset appearing at same time would reduce the unit allowable value.
- Zero rotation blacklash and high precision expansion sleeve design.
- Aluminum sleeve, light and low rotatary inertia.
- Tighted axle to have high friction torque.
- Stable rotation in maximum speed to 40m/s.

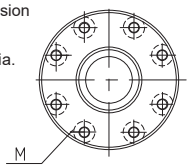


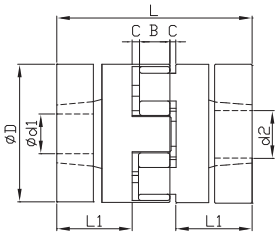


| Component | Material | Surface finished | Accessories |
|---|---|---|---|
| Main frame | Aluminum | Anodized | Hexagon Socket Screw |
| Spider | TPEE | — | |

| Size | | Spider Elestic strength (Color) | ØDd1&Ød2 selection *Ød1≦ Ød2 | | | | | | | | | L | L1 | B | C | Cinch Bolt | |
|---|---|---|---|---|---|---|---|---|---|---|---|---|---|---|---|---|---|
| Model | ØD | | 16 | 20 | 24 | 26 | 28 | 29 | 32 | 36 | 38 | | | | | M | Lock Torque (N·m) |
| GOOFASE GOOFCSE | 55 | 92sh A(W) 98sh A(R) | ● | ● | ● | | | | | | | 78 | 30 | 14 | 2 | M5 | 6 |
| | 65 | | | | | ● | ● | ● | ● | ● | ● | 90 | 35 | 15 | 2.5 | M5 | 7 |
| | 80 | | | | | ● | ● | ● | ● | ● | ● | 114 | 45 | 18 | 3 | M6 | 12 |
| | 95 | | | | | | ● | ● | ● | ● | ● | 126 | 50 | 20 | 3 | M8 | 30 |

★Moment of inertial torque and weight calculated by maximum diameter.

| Specifications | | Allowable Torque (N·m) | | Allowable Angle Misalignment | Allowable Parallel Misalignment (mm) | | Allowable Axile Misalignment (mm) | Static Torsional Stiffness (N·m/rad) | | Max. RPM (r/min$^{-1}$) | Moment of Inertia (kg·m) | Weight (g) |
|---|---|---|---|---|---|---|---|---|---|---|---|---|
| Model | ØD | R | W | | R | W | | R | W | | | |
| GOOFASE | 55 | 60 | 35 | 0.9° | 0.1 | 0.1 | 1.2 | 2600 | 1600 | 8650 | $0.78*10^{-4}$ | 162 |
| | 65 | 160 | 95 | | | | 1.2 | 2600 | 1600 | 7350 | $1.70*10^{-4}$ | 240 |
| | 80 | 325 | 190 | | | | 1.2 | 4900 | 3000 | 5950 | $5.17*10^{-4}$ | 490 |
| | 95 | 450 | 265 | | | | 1.2 | 2600 | 1600 | 5000 | $11.7*10^{-4}$ | 772 |

# GOOFCSE

(W)

(R)

- Operating temperature：-20°C~90°C
- Offset of angular, parallel, or axial deviation are individual allowed value , so couple reasons of axial offset appearing at same time would reduce the unit allowable value.
- Zero rotation blacklash and high precision expansion sleeve design.
- Tighted axle to have high friction torque.
- Stable rotation in maximum speed to 40m/s.

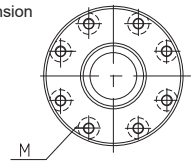


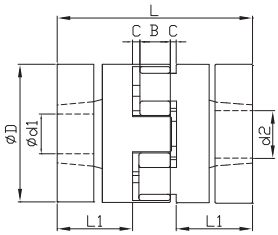


| Component | Material | Surface finished | Accessories |
|---|---|---|---|
| Main frame | Mid-carbon steel | Black dyed | Hexagon Socket Screw |
| Spider | TPEE | — | |

| Specifications | | Allowable Torque (N·m) | | Allowable Angle Misalignment | Allowable Parallel Misalignment (mm) | | Allowable Axile Misalignment (mm) | Static Torsional Stiffness (N·m/rad) | | Max. RPM (r/min$^{-1}$) | Moment of Inertia (kg·m) | Weight (g) |
|---|---|---|---|---|---|---|---|---|---|---|---|---|
| Model | | | | | | | | | | | | |
| GOOFCSE | 55 | 60 | 35 | 0.9° | 0.1 | 0.1 | 1.2 | 2600 | 1600 | 6950 | $1.91*10^{-4}$ | 399 |
| | 65 | 160 | 95 | | | | 1.2 | 2600 | 1600 | 5850 | $4.18*10^{-4}$ | 592 |
| | 80 | 325 | 190 | | | | 1.2 | 4900 | 3000 | 4758 | $12.9*10^{-4}$ | 1225 |
| | 95 | 450 | 265 | | | | 1.2 | 2600 | 1600 | 4000 | $31.7*10^{-4}$ | 2300 |

| Ordering Example: | GOOFCSE80 | - | 28 | * | 36 | - | 100 PCS |
|---|---|---|---|---|---|---|---|
| | Model no. | | Ød1 | | Ød2 | | Q'ty |

# Jaw Spider

| Model No. | ØD | Coupling | | Shape diagram | Colour | Hardness JIS A (Shore A standard) |
|---|---|---|---|---|---|---|
| GOOFS-B<br>GOOFS-W<br>GOOFS-R | 14 | GOOFAME14 | GOOFACE14 | | B= Blue<br>W= White<br>R= Red | B=80<br>W=92<br>R=98 |
| | 20 | GOOFAME20 | GOOFACE20 | | | |
| | 30 | GOOFAME30<br>GOOFACE30 | GOOFAMK30<br>GOOFACK30 | | | |
| | 40 | GOOFAME40<br>GOOFACE40 | GOOFAMK40<br>GOOFACK40 | | | |

| Model No. | ØD | Coupling | Shape diagram | Colour | Hardness JIS A (Shore A standard) | Remark |
|---|---|---|---|---|---|---|
| GOOFS-W<br>GOOFS-R | 55 | GOOFACE | | W=White<br>R =Red | 92 shA<br>98 shA | Spider colour might be red or green base on same hardness |
| | 65 | | | | | |
| | 80 | | | | | |
| | 55 | GOOFASE | | | | |
| | 65 | | | | | |
| | 80 | | | | | |
| | 95 | | | | | |
| | 55 | GOOFCSE | | | | |
| | 65 | | | | | |
| | 80 | | | | | |
| | 95 | | | | | |

| Ordering Example: | GOOFS-W | 30 |
|---|---|---|
| | Model no. | ØD |

## Shore Hardness (Shore A)

- Spiders are available used for set screw type and clamping type.
- Larger hardness has better sensibility in angular transmission. Smaller hardness has better vibration absorbability.
- Additional remark of installation of Flexible couplings integrated with Jaw Spiders :
  Flexible couplings (integrated with Jaw Spiders), model number FAME, FAMK, FACE, FACK series need to reserve "C" dimension while assembling.
  This would ensure coupling the function and usage life of Jaw Spiders, as well as keeping isoltion feature of the coupling.

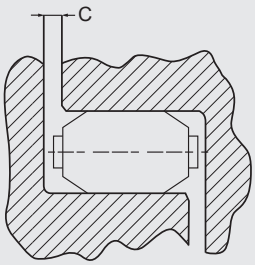

Spacer Material Comparison



## Polyacetal plastic(POM)

### Polyacetal(Abbr. POM), also called Plastic steel.

POM character : Polyoxymethylene is a kind of thermal plasticity polymer, having good physical, mechanical and chemical functions. It has high hardness, rigidity in very wide range of temperature. Secondarily, resisted strength, fatigue resistance, creep resistance are excellent as well, especially outstanding dimension stability and durability; besides, polyoxymethylene has advantages of small friction factor, good durability, dispens-able lubricant, good organci solvent-resistance, low absorbent ability etc…. Long-term using in the range of -40~104℃. In addition, polyoxymethylene has better corro-sion resistance.

## Urethane(PU)

### PU glue is also called polyurethane

Polyurethane application is kind of flexible polymer, used as elastic resilience and damping in shock absorber. Generally, polyurethane suits for terrains with collision from small to medium level most, and adjustable polyurethane makes perfect effect. Urethane glue is water-resistant, abrasion-resist, high mechanism strength, and product hardness adjusted by purposes, high elasticity, good shock absorbability, no hurting machine tools, a excelent anti-collision material.

## Highly wear-resisting copper alloy

### Highly wear-resisting copper alloy(aluminum bronze(C6161))

High tensile-resist strength, wear-resistance, and offer various extruded materials, forged materials, centrifugal rolls, and applied to gear, bearing, bushing, slide panel, plastic mould, electrode heads….etc.

## Character chart for plastic material

| Material | Specific gravity | Thermal distortion temperature | Flammability | Feature | | Purpose |
|---|---|---|---|---|---|---|
| | | | | Advantage | Defect | |
| POM | 1.14 ~ 1.43 | Homopolymer | Flammable | 1. Tough、flexible | 1. Low anti-ultraviolet | 1. Parts in industry load |
| | | | | 2. CLIP character、excelent fatigue resistance | 2. Heat dissolution and formald-ehyde gas produced | 2. Automobile、electric parts |
| | | | | 3. Self-lubricity, low abrasion-resistance | 3. Low anti-acid | 3. toy parts |
| | | | | 4. Drug tolerance | | 4. Substitute for metal |
| | | | | 5. Good heat-resistance | | |
| PU | 1.11 ~ 1.24 | Softening point | Flammable | 1. Good abrasion-resistance | 1. Softness in low level，easily stuck while demolding and shrink. | 1. Shoes and sports utilities |
| | | | | 2. Climate-resistant and low temperature-resistant (-35℃~50℃) | 2. Long dried time for materials | 2. Shock absorb, noise elimination, bushing |
| | | | | 3. anti-oxygen, ozone aging characters | | 3. Grip and grasp with soft-touch feeling |
| | | | | 4. Good tensile rate of bending strength | | |
| | | | | 5. Adjustable toughness | | |

## Remark of plastic spacer corrosponding to environment temperature.

Plastic spacer series include rubber or plastic parts. These model no, must be used in operating temperature range indicated on our catalogs. If temperature over 30℃, max. torque and allowable torque shall be corrected by factors as listed below.

| Environment temperature | Corrective factor |
|---|---|
| -20℃ ~ 30℃ | 1.00 |
| 30℃ ~ 40℃ | 0.80 |
| 40℃ ~ 60℃ | 0.70 |
| 60℃ ~ 100℃ | 0.55 |

## Rigidity Coupling

# GOORAM

- Light, very low inertial and high sensibility.
- Maintenance free, super anti-oil and corrosion-resistance.

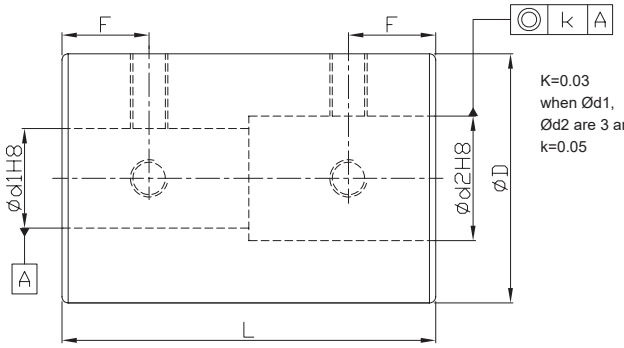


K=0.03
when Ød1,
Ød2 are 3 and 4,
k=0.05

*When Ød1<4 and Ød2>5, there would be 3 set screws.
*When Ød1 and Ød2 both smaller than 4, there would be 2 set screws.

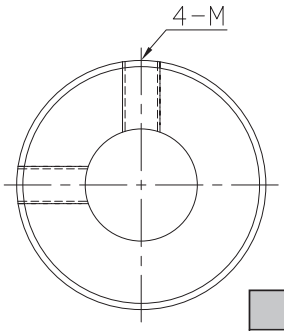


| Material | Surface Finish | Accessories |
|---|---|---|
| Aluminum Alloy | Anodized | Nylon Set Screw |

| Dimensions | | Ød1&Ød2 selection *Ød1 ≦ Ød2 | | | | | | | | | | | | | L | F | M Rough thread |
|---|---|---|---|---|---|---|---|---|---|---|---|---|---|---|---|---|---|
| Model No. | ØD | 3 | 4 | 5 | 6 | 8 | 10 | 11 | 12 | 14 | 15 | 16 | 18 | 20 | | | |
| GOORAM | 16 | • | • | • | • | | | | | | | | | | 24 | 6 | 3 |
| | 20 | | | • | • | • | • | | | | | | | | 30 | 7 | |
| | 25 | | | | | • | • | • | • | | | | | | 36 | 9 | 4 |
| | 32 | | | | | | | | • | • | • | • | | | 41 | 10 | |
| | 40 | | | | | | | | | | • | • | • | • | 44 | 10.5 | 5 |

★Moment of inertial torque and weight calculated by maximum diameter.

| Specification | | Allowable Wrench Torque (N·m) | Max. RPM ($r/min^{-1}$) | ★ Moment of Inertia ($kg·m^2$) | Screw Fixing Torque (N·m) | ★ Weight (g) |
|---|---|---|---|---|---|---|
| Model No. | ØD | | | | | |
| GOORAM | 16 | 0.3 | 24000 | $4.4*10^{-7}$ | 0.7 | 11 |
| | 20 | 0.5 | 19000 | $1.3*10^{-6}$ | | 20 |
| | 25 | 1 | 15000 | $3.9*10^{-6}$ | 1.7 | 39 |
| | 32 | 2 | 12000 | $1.2*10^{-5}$ | | 71 |
| | 40 | 4 | 4000 | $1.5*10^{-5}$ | 4 | 120 |

| Ordering Example: | GOORAM20 | - | 6 | * | 8 | - | 100 PCS |
|---|---|---|---|---|---|---|---|
| | Model no. | | Ød1 | | Ød2 | | Q'ty |

## Rigidity Coupling

# GOORSM

- Light, very low inertial and high sensibility.
- Maintenance free, super anti-oil and corrosion-resistance.

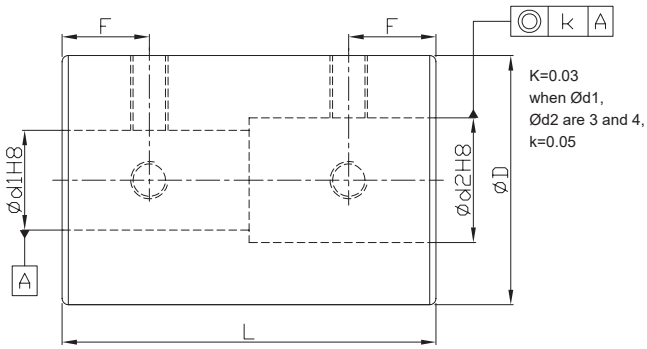


*When Ød1<4 and Ød2>5, there would be 3 set screws.
*When Ød1 and Ød2 both smaller than 4, there would be 2 set screws.

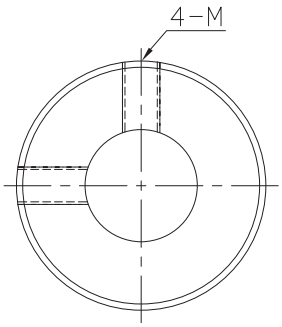


| Material | Accessories |
|---|---|
| SUS303 | Nylon Set Screw |

| Dimensions | | Ød1&Ød2 selection *Ød1 ≦ Ød2 | | | | | | | | | | | L | F | M Rough thread |
|---|---|---|---|---|---|---|---|---|---|---|---|---|---|---|---|
| Model No. | ØD | 3 | 4 | 5 | 6 | 8 | 10 | 11 | 12 | 14 | 15 | 16 | | | |
| GOORSM | 16 | • | • | • | • | | | | | | | | 24 | 6 | 3 |
| | 20 | | | • | • | • | • | | | | | | 30 | 7 | |
| | 25 | | | | | • | • | • | • | | | | 36 | 9 | 4 |
| | 32 | | | | | | | | • | • | • | • | 41 | 10 | |

★Moment of inertial torque and weight calculated by maximum diameter.

| Specification | | Allowable Wrench Torque (N·m) | Max. RPM ($r/min^{-1}$) | ★ Moment of Inertia ($kg·m^2$) | Screw Fixing Torque (N·m) | ★ Weight (g) |
|---|---|---|---|---|---|---|
| Model No. | ØD | | | | | |
| GOORSM | 16 | 0.3 | 24000 | $1.2*10^{-6}$ | 0.7 | 28 |
| | 20 | 0.5 | 19000 | $3.5*10^{-6}$ | | 54 |
| | 25 | 1 | 15000 | $1.0*10^{-5}$ | 1.7 | 100 |
| | 32 | 2 | 12000 | $3.1*10^{-5}$ | | 190 |

Ordering Example: GOORSM20 (Model no.) - 6 (Ød1) * 8 (Ød2) - 100 PCS (Q'ty)

## Rigidity Coupling

# GOORACS

- Light, very low inertial and high sensibility.
- Maintenance free, super anti-oil and corrosion-resistance.
- Beam type with no allowable offset almost, please show the axis entirely in operating.

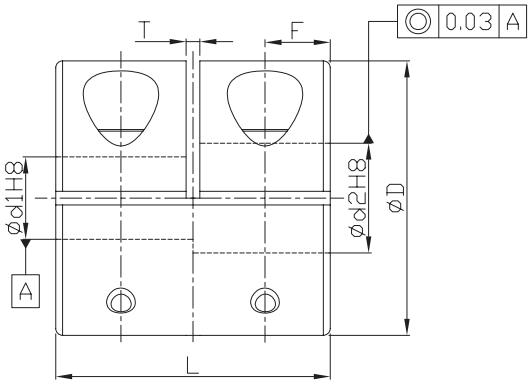


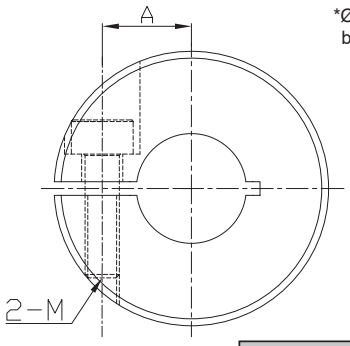


*Ød1&Ød2 tolerance are defined before machining.

| Material | Surface Finish | Accessories |
|---|---|---|
| Aluminum alloy | Anodized | Hexagon Socket Screw |

| Dimensions | | Ød1&Ød2 selection *Ød1 ≦ Ød2 | | | | | | | | | L | A | T | F | M Rough thread |
|---|---|---|---|---|---|---|---|---|---|---|---|---|---|---|---|
| Model No. | ØD | 5 | 6 | 8 | 10 | 12 | 14 | 15 | 16 | 18 | | | | | |
| GOORACS | 16 | • | • | | | | | | | | 16 | 5 | 1 | 3.75 | 2.5 |
| | 20 | | • | • | | | | | | | 20 | 6.5 | | 4.75 | |
| | 25 | | | • | • | | | | | | 25 | 9 | | 6 | 3 |
| | 32 | | | | • | • | • | | | | 32 | 11 | | 7.75 | 4 |
| | 40 | | | | | | • | • | • | • | 44 | 13 | 1.5 | 10.5 | 5 |

★Moment of inertial torque and weight calculated by maximum diameter.

| Specification | | Allowable Wrench Torque (N·m) | Max. RPM ($r/min^{-1}$) | ★ Moment of Inertia ($kg·m^2$) | Screw Fixing Torque (N·m) | ★ Weight (g) |
|---|---|---|---|---|---|---|
| Model No. | ØD | | | | | |
| GOORACS | 16 | 0.3 | 9500 | $3.0*10^{-7}$ | 1 | 9 |
| | 20 | 0.5 | 7600 | $8.7*10^{-7}$ | | 15 |
| | 25 | 1 | 6100 | $2.7*10^{-6}$ | 1.5 | 29 |
| | 32 | 2 | 4800 | $7.1*10^{-6}$ | 2.5 | 61 |
| | 40 | 4 | 4000 | $1.5*10^{-5}$ | 7 | 120 |

| Ordering Example: | GOORACS32 | - | 10 | * | 12 | - | 100 PCS |
|---|---|---|---|---|---|---|---|
| | Model no. | | Ød1 | | Ød2 | | Q'ty |

## Rigidity Coupling

# GOORSCS

- Light, very low inertial and high sensibility.
- Maintenance free, super anti-oil and corrosion-resistance.
- Beam type with no allowable offset almost, please show the axis entirely in operating.

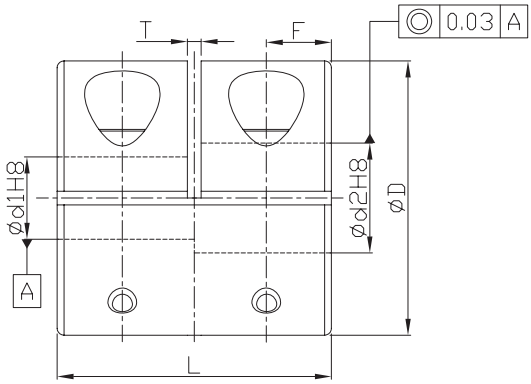


*Ød1&Ød2 tolerance are defined before machining.

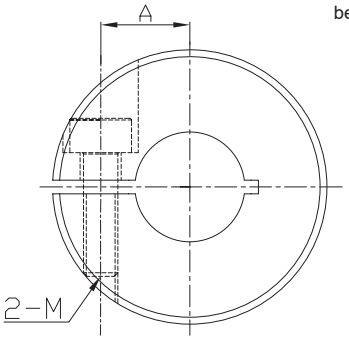


| Material | Accessories |
|---|---|
| SUS303 | Hexagon Socket Screw |

| Dimensions | | Ød1&Ød2 selection *Ød1 ≦ Ød2 | | | | | | L | A | T | F | M Rough thread |
|---|---|---|---|---|---|---|---|---|---|---|---|---|
| Model No. | ØD | 5 | 6 | 8 | 10 | 12 | 14 | | | | | |
| GOORSCS | 16 | • | • | | | | | 16 | 5 | 1 | 3.75 | 2.5 |
| | 20 | | • | • | | | | 20 | 6.5 | | 4.75 | |
| | 25 | | | • | • | | | 25 | 9 | | 6 | 3 |
| | 32 | | | | • | • | • | 32 | 11 | | 7.75 | 4 |

★Moment of inertial torque and weight calculated by maximum diameter.

| Specification | | Allowable Wrench Torque (N·m) | Max. RPM ($r/min^{-1}$) | ★ Moment of Inertia ($kg·m^2$) | Screw Fixing Torque (N·m) | ★ Weight (g) |
|---|---|---|---|---|---|---|
| Model No. | ØD | | | | | |
| GOORSCS | 16 | 0.3 | 9500 | $8.0*10^{-7}$ | 1 | 22 |
| | 20 | 0.5 | 7600 | $2.4*10^{-6}$ | | 41 |
| | 25 | 1 | 6100 | $7.3*10^{-6}$ | 1.5 | 80 |
| | 32 | 2 | 4800 | $2.5*10^{-5}$ | 2.5 | 160 |

| Ordering Example: | GOORSCS20 | - | 6 | * | 8 | - | 100 PCS |
|---|---|---|---|---|---|---|---|
| | Model no. | | Ød1 | | Ød2 | | Q'ty |

## Rigidity Coupling

# GOORAB

- Light, very low inertial and high sensibility.
- Maintenance free, super anti-oil and corrosion-resistance.
- Beam type with no allowable offset almost, please show the axis entirely in operating.

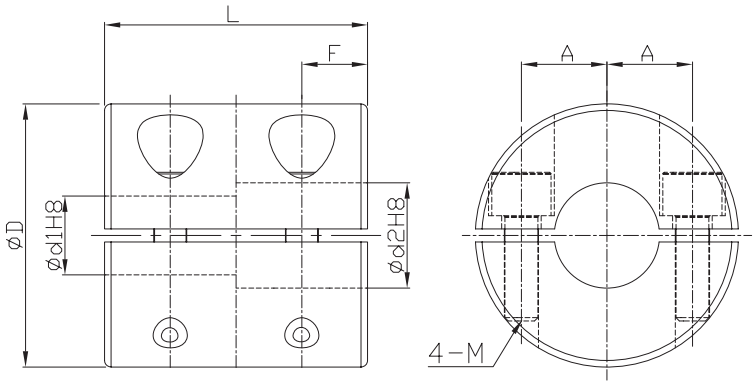


*Ød1&Ød2 tolerance are defined before machining.

| Material | Surface Finish | Accessories |
|---|---|---|
| Aluminum Alloy | Anodized | Hexagon Socket Screw |

| Dimensions | | Ød1&Ød2 selection *Ød1 ≦ Ød2 | | | | | | L | A | F | M |
|---|---|---|---|---|---|---|---|---|---|---|---|
| Model No. | ØD | 5 | 6 | 8 | 10 | 12 | 14 | | | | |
| GOORAB | 16 | • | • | | | | | 16 | 5 | 4 | 2.5 |
| | 20 | | • | • | | | | 20 | 6.5 | 5 | |
| | 25 | | | • | • | | | 25 | 9 | 6 | 3 |
| | 32 | | | | • | • | • | 32 | 11 | 8 | 4 |

★Moment of inertial torque and weight calculated by maximum diameter.

| Specification | | Allowable Wrench Torque (N·m) | Max. RPM ($r/min^{-1}$) | ★ Moment of Inertia ($kg·m^2$) | Screw Fixing Torque (N·m) | ★ Weight (g) |
|---|---|---|---|---|---|---|
| Model No. | ØD | | | | | |
| GOORAB | 16 | 0.3 | 9500 | $3.2*10^{-7}$ | 1 | 8.8 |
| | 20 | 0.5 | 7600 | $8.7*10^{-7}$ | | 15 |
| | 25 | 1 | 6100 | $2.7*10^{-6}$ | 1.5 | 29 |
| | 32 | 2 | 4800 | $9.3*10^{-6}$ | 2.5 | 61 |

| Ordering Example: | GOORAB25 | - | 8 | * | 10 | - | 100 PCS |
|---|---|---|---|---|---|---|---|
| | Model no. | | Ød1 | | Ød2 | | Q'ty |

## Rigidity Coupling

# GOORSB

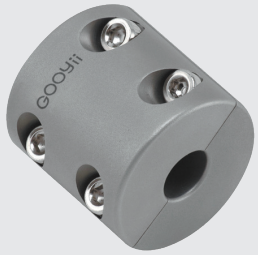

- Light, very low inertial and high sensibility.
- Maintenance free, super anti-oil and corrosion-resistance.
- Beam type with no allowable offset almost, please show the axis entirely in operating.

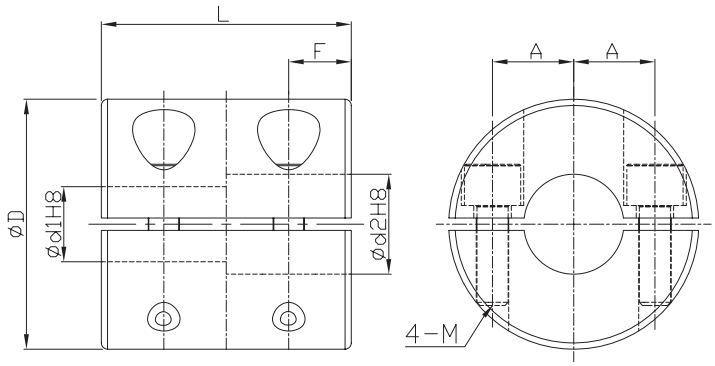


*Ød1&Ød2 tolerance are defined before machining.

| Material | Accessories |
|---|---|
| SUS303 | Hexagon Socket Screw |

| Dimensions | | Ød1&Ød2 selection *Ød1 ≦ Ød2 | | | | | | L | A | F | M |
|---|---|---|---|---|---|---|---|---|---|---|---|
| Model No. | ØD | 5 | 6 | 8 | 10 | 12 | 14 | | | | |
| GOORSB | 16 | • | • | | | | | 16 | 5 | 4 | 2.5 |
| | 20 | | • | • | | | | 20 | 6.5 | 5 | |
| | 25 | | | • | • | | | 25 | 9 | 6 | 3 |
| | 32 | | | | • | • | • | 32 | 11 | 8 | 4 |

★Moment of inertial torque and weight calculated by maximum diameter.

| Specification | | Allowable Wrench Torque (N·m) | Max. RPM ($r/min^{-1}$) | ★ Moment of Inertia ($kg·m^2$) | Screw Fixing Torque (N·m) | ★ Weight (g) |
|---|---|---|---|---|---|---|
| Model No. | ØD | | | | | |
| GOORSB | 16 | 0.3 | 9500 | $8.2*10^{-7}$ | 1 | 22 |
| | 20 | 0.5 | 7600 | $2.4*10^{-6}$ | | 41 |
| | 25 | 1 | 6100 | $7.3*10^{-6}$ | 1.5 | 80 |
| | 32 | 2 | 4800 | $2.5*10^{-5}$ | 2.5 | 160 |

| Ordering Example: | GOORSB20 | - | 6 | * | 8 | - | 100 PCS |
|---|---|---|---|---|---|---|---|
| | Model no. | | Ød1 | | Ød2 | | Q'ty |

## Rigidity Coupling

# GOORACL

- Light, very low inertial and high sensibility.
- Maintenance free, super anti-oil and corrosion-resistance.
- Beam type with no allowable offset almost, please show the axis entirely in operating.

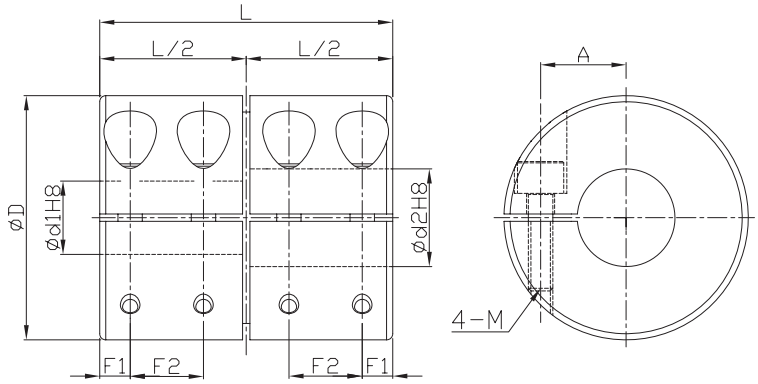


*Ød1&Ød2 tolerance are defined before machining.

| Material | Surface Finish | Accessories |
|---|---|---|
| Aluminum Alloy | Anodized | Hexagon Socket Screw |

| Dimensions | | Ød1&Ød2 selection *Ød1 ≦ Ød2 | | | | | | L | A | F1 | F2 | M |
|---|---|---|---|---|---|---|---|---|---|---|---|---|
| Model No. | ØD | 5 | 6 | 8 | 10 | 12 | 14 | | | | | |
| GOORACL | 16 | • | • | | | | | 22 | 5 | 2.5 | 5.5 | 2 |
| | 20 | | • | • | | | | 24 | 7 | | 6 | |
| | 25 | | | • | • | | | 36 | 9 | 4.5 | 9 | 2.5 |
| | 32 | | | | • | • | • | 40 | 11 | 4 | 10 | 3 |

★Moment of inertial torque and weight calculated by maximum diameter.

| Specification | | Allowable Wrench Torque (N·m) | Max. RPM ($r/min^{-1}$) | ★ Moment of Inertia ($kg·m^2$) | Screw Fixing Torque (N·m) | ★ Weight (g) |
|---|---|---|---|---|---|---|
| Model No. | ØD | | | | | |
| GOORACL | 16 | 0.3 | 9000 | $3.4*10^{-7}$ | 0.5 | 10 |
| | 20 | 0.5 | 7000 | $9.2*10^{-7}$ | | 18 |
| | 25 | 1 | 6000 | $3.4*10^{-6}$ | 1 | 38 |
| | 32 | 2 | 4500 | $1.0*10^{-5}$ | 1.5 | 70 |

| Ordering Example: | GOORACL25 | - | 8 | * | 10 | - | 100 PCS |
|---|---|---|---|---|---|---|---|
| | Model no. | | Ød1 | | Ød2 | | Q'ty |

## Rigidity Coupling

# GOORSCL

- Light, very low inertial and high sensibility.
- Maintenance free, super anti-oil and corrosion-resistance.
- Beam type with no allowable offset almost, please show the axis entirely in operating.

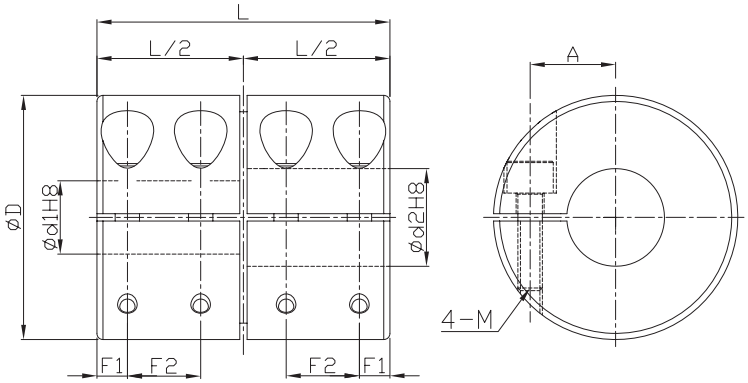


*Ød1&Ød2 tolerance are defined before machining.

| Material | Accessories |
|---|---|
| SUS303 | Hexagon Socket Screw |

| Dimensions | | Ød1&Ød2 selection *Ød1 ≦ Ød2 | | | | | | L | A | F1 | F2 | M |
|---|---|---|---|---|---|---|---|---|---|---|---|---|
| Model No. | ØD | 5 | 6 | 8 | 10 | 12 | 14 | | | | | |
| GOORSCL | 16 | • | • | | | | | 22 | 5 | 2.5 | 5.5 | 2 |
| | 20 | | • | • | | | | 24 | 7 | | 6 | |
| | 25 | | | • | • | | | 36 | 9 | 4.5 | 9 | 2.5 |
| | 32 | | | | • | • | • | 40 | 11 | 4 | 10 | 3 |

★Moment of inertial torque and weight calculated by maximum diameter.

| Specification | | Allowable Wrench Torque (N·m) | Max. RPM ($r/min^{-1}$) | ★ Moment of Inertia ($kg·m^2$) | Screw Fixing Torque (N·m) | ★ Weight (g) |
|---|---|---|---|---|---|---|
| Model No. | ØD | | | | | |
| GOORSCL | 16 | 0.3 | 9000 | $8.9*10^{-7}$ | 0.5 | 25 |
| | 20 | 0.5 | 7000 | $2.5*10^{-6}$ | | 45 |
| | 25 | 1 | 6000 | $9.2*10^{-6}$ | 1 | 100 |
| | 32 | 2 | 4500 | $2.7*10^{-5}$ | 1.5 | 180 |

| Ordering Example: | GOORSCL25 | - | 8 | * | 10 | - | 100 PCS |
|---|---|---|---|---|---|---|---|
| | Model no. | | Ød1 | | Ød2 | | Q'ty |

## Installation Notice :

( 1 ) To avoid mistakenly operating driver, please be sure to cut off main power and start installation after security confirmation.

( 2 ) Please clear out miscellaneous, dust and oil...etc attached on the shafts and inner of coupling. Especially for the grease with molybdenum disulfide and extreme pressure additive which affect friction factor substantially, please proceed defatting treatment entirely.

( 3 ) In order to perform coupling functions completely, please proceed installing as range of max. allowable offset in the spec list. Installation error in the list is top value occuring individually, so please take below half of allowed values in multiple cases into account.

( 4 ) Please take the ruler against to outer body while centering, with around 90° to proceed checking two departed points. Centering accuracy has huge affection to life hours of unit.

( 5 ) Please set safety cover after installating this product. Otherwise, it might get hurt by touching products in operating.

( 6 ) To lock screw, please be sure to use corrected torque wrench and refer to the torque value of clamping lock screw in the spec list to secure.

( 7 ) Installing by using wrong connecting ways would cause too much vibration, abnormal running or inaccurate center, overloaded defelction to damage motor, coupling...etc mechanism units. It's recommended to notice accuracy balance correction to extend unit life while assembling mechanically.

## Operation Notice :

( 1 ) Considering safety, please set protective jacket on the turning parts of device surrounding couplings.

( 2 ) If allowable offset is set over limited range or too much torque, it might cause distortion of coupling possible to shorten life.

( 3 ) If any noise (metal sound) in running, please stop operating, and check any interference to centering and shafts, and screw loosened or not.

( 4 ) If load variation of device is too much, please put adhensive or adjust one level higher of coupling model to avoid screw loose.

## Safety Notice :

In order to work safetly, please read description as below, and keep the instruction to recheck the points if necessary.

### Danger

Following acts might cause danger or harmful damage if using mistakenly.

- For safety work, coupling and related rotating parts must be protected by covers. You might be hurt if touching these parts in operating.
- To avoid danger, protection device must be installed.
- Power off is necessary while assembling and disassembling.
- Lock screw and counter bore screw must be secured by using screwdriver, wrench or torque wrench fitly.
- Operating speed of product never over top speed.
- No disassembling or recombinating products.

### Warning

Following acts might cause body hurt or wealth loss if using mistakenly.

- Please operate in allowable deviation range. It might cause damage of coupling if deviation is out of allowed range and probably affect coupling system badly.
- Torque produced by continuously operating can't exceed rated torque. Otherwise, coupling might be damaged, or affect coupling system badly.
- While securing, please use screws (lock screw and counter bore screw) appointed by GMT, not any ones else.
- No operating in the environment affecting products badly.
- Please stop operation of rotating machine if hearing abnormal noise. Check deviation of machine, any interference between shafts, screws loosened or not...etc.
- If the rotating machine you use operates in bigger load variation, please use anti-loosen glue on screws to avoid coming off, or use one-size larger coupling.
- Please ask experts to deal with these products to avoid damage to environment while product abandon.
- Never touch coupling after completing operation. You might be burned by high temperature caused by coupling system.

# Technical Information Couplings

## Coupling Testing Facility

# Coupling Testing Facility

### ◆Exclusive use for coupling test

(1) For use durability test.

(2) For mass production inspection in development process.

| | | | |
|---|---|---|---|
| Coupling Test Report Test Item : General Test | GOOYii | Tester | Q013 |
| Model Number : FACE  Type of space ring : R | Test Day | 2012/02/13 | 16:43:47 |
| Outer diameter : 40  Inner diameter d1 : 10  Inner diameter d2 : 10 | 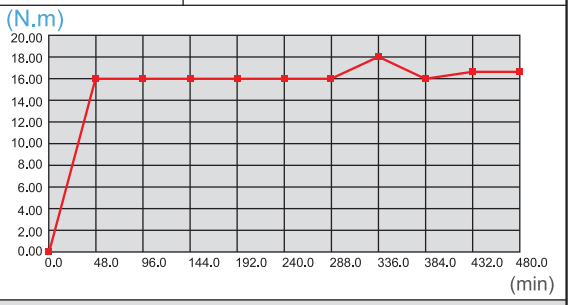 | | |
| **Test Parameger** | | | |
| Deflection : -1.08°  Eccentricity : -0.10 mm | | | |
| Planned testing time : 480 min 0 sec | | | |
| Forward rotation : 0 min 10 sec | | | |
| Pause : 2 sec | | | |
| Inverse rotation : 0 min 10 sec | | | |
| Present torgue : 16.50 (N.m) | Remark: | | |
| Zeroed torgue : 0.00 (N.m) | | | |
| | | | |
| Machine operating time : 480 min 0 sec | Serial NO. | 20120213-FACE40R-8 | |
| Revolution Test : 200 rpm / min | Back to main page | Back to last page | Print / PAUSE / STOP |

GOOyii

# Precision Ballscerws

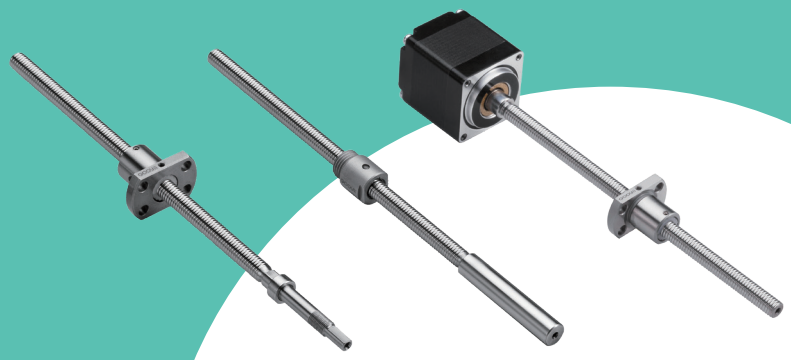

# Lead Accuracy of Ball Screw

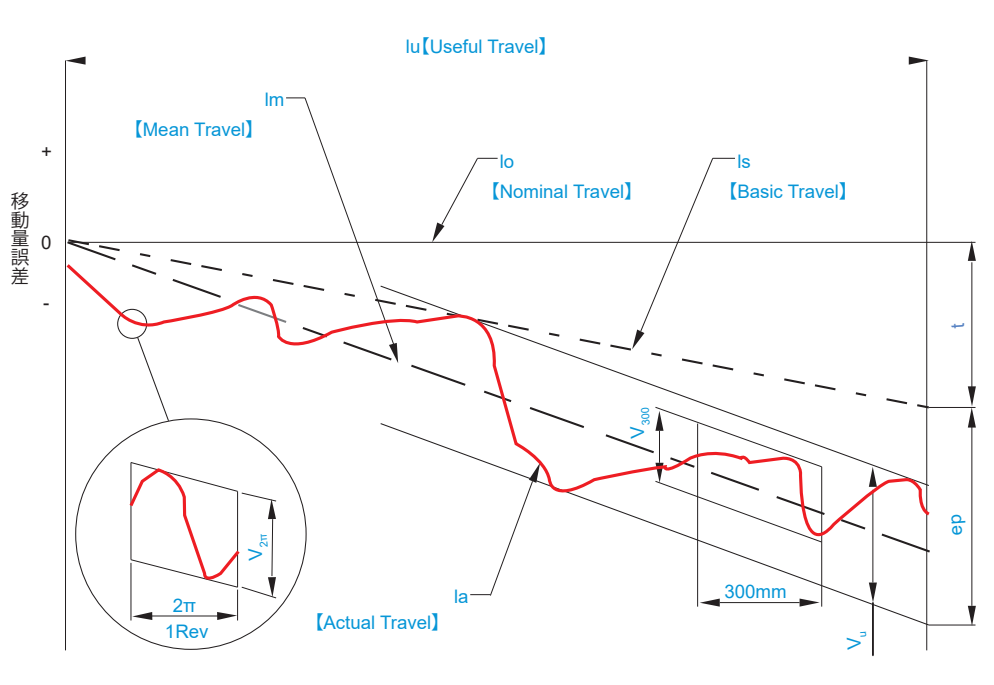


| Code | Designation of Code | Coding Explanation |
|---|---|---|
| t | Target Value of Basic Travel | The value obtained by deducting the nominal travel from basic travel within the useful travel length. |
| ep | Mean Travel Deviation | The value obtained by deducting the basic travel from mean travel. |
| Is | Basic Travel | Corrected axial travel displacement of the nominal travel, which is occurred due to thermal and loading. It leans to actual travel line. |
| Im | Mean Travel | Mean travel line. |
| | | The straight line calculated by least square method or simple approximation method according to the curve indicated as actual travel. |
| Ia | Actival Travel | The actual travel measured.<br>The maximum variations of the actual travel (range) between two straight lines parallel to mean travel will be determined according to the following 3 items. |
| Vu | Variations | Max. variation within useful length of the shaft section. |
| V300 | | Max. variation within 300mm randomly retrieved from useful length of the shaft section. |
| V2π | | Max. variation of one-rotation (2π rad) randomly retrieved from useful length of the shaft section. |

## International Accuracy Standard of Ball Screw

Unit：μm

| Grade Classification | | Ground Grade | | | Rolled Grade | |
|---|---|---|---|---|---|---|
| | | C0 | C1 | C3 | C5 | C7 |
| $V_{300}$ | ISO、DIN | ※ | 6 | 12 | 23 | 52 |
| | JIS | 3.5 | 5 | 8 | 18 | 50 |
| | GMT | 3.5 | 5 | 8 | 18 | 50 |

※ $V_{300}$：Max. variation within 300mm randomly retireved from effective length of the shaft section.

## Variation Range of Preloaded Torque (Source : JIS B1192)

Unit：±%

| Basic Torque (Kgf. cm) | | Useful Stroke (mm) | | | | | | | | | | | | | | |
|---|---|---|---|---|---|---|---|---|---|---|---|---|---|---|---|---|
| | | < 4000mm | | | | | | | | | | from 4000mm (incl.) up to10000mm | | | | |
| | | Slenderness≦40 | | | | | 40＜Slenderness＜60 | | | | | - | | | | |
| | | Accuracy | | | | | Accuracy | | | | | Accuracy | | | | |
| Above | To | C0 | C1 | C3 | C5 | C7 | C0 | C1 | C3 | C5 | C7 | C0 | C1 | C3 | C5 | C7 |
| 2 | 4 | 30 | 35 | 40 | 50 | - | 40 | 40 | 50 | 60 | - | - | - | - | - | - |
| 4 | 6 | 25 | 30 | 35 | 40 | - | 35 | 35 | 40 | 45 | - | - | - | - | - | - |
| 6 | 10 | 20 | 25 | 30 | 35 | 40 | 30 | 30 | 35 | 40 | 45 | - | - | 40 | 45 | 50 |
| 10 | 25 | 15 | 20 | 25 | 30 | 35 | 25 | 25 | 30 | 35 | 40 | - | - | 35 | 40 | 45 |
| 25 | 63 | 10 | 15 | 20 | 25 | 30 | 20 | 20 | 25 | 30 | 35 | - | - | 30 | 35 | 40 |
| 63 | 100 | - | 15 | 15 | 20 | 30 | - | - | 20 | 25 | 35 | - | - | 25 | 30 | 35 |

Note：1. Slenderness Ratio = screw Tread length / Screw Nominal O.D.
2. Basic variation range of designed pre-load torque.

## Variation of Mean Travel

Unit：μm

| Accuracy | | C0 | | C1 | | C3 | | C5 | |
|---|---|---|---|---|---|---|---|---|---|
| Item | | Mean Travel Deviation (±ep) | Variation ($V_u$) | Mean Travel Deviation (±ep) | Variation ($V_u$) | Mean Travel Deviation (±ep) | Variation ($V_u$) | Mean Travel Deviation (±ep) | Variation ($V_u$) |
| Useful Stroke(mm) | | | | | | | | | |
| Above | Below | | | | | | | | |
| - | 100 | 3 | 3 | 3 | 5 | 8 | 8 | 18 | 18 |
| 100 | 200 | 3.5 | 3.5 | 3 | 5 | 10 | 8 | 20 | 18 |
| 200 | 300 | 4 | 4 | 3.5 | 5 | 12 | 8 | 23 | 18 |
| 300 | 400 | 5 | 5 | 3.5 | 5 | 13 | 10 | 25 | 20 |
| 400 | 500 | 6 | 6 | 4 | 5 | 15 | 10 | 27 | 20 |
| 630 | 800 | 6 | 6 | 4 | 6 | 16 | 12 | 30 | 23 |
| 500 | 630 | 7 | 7 | 5 | 7 | 18 | 13 | 35 | 25 |
| 800 | 1000 | 8 | 8 | 6 | 8 | 21 | 15 | 40 | 27 |
| 1000 | 1250 | 9 | 9 | 6 | 9 | 24 | 16 | 46 | 30 |

## Variation

| Accuracy | C0 | | C1 | | C3 | | C5 | |
|---|---|---|---|---|---|---|---|---|
| Item | $V_{300}$ | V2π | V300 | V2π | V300 | V2π | V300 | V2π |
| Allowable Value | 3.5 | 3 | 5 | 4 | 8 | 6 | 18 | 8 |

# GOOBS Series Unique Features

Reflux Design

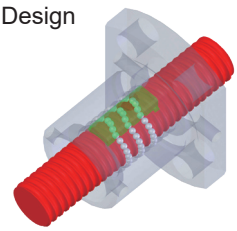

## ◎Reflux Design

Internal Circulation Structure

☒One circulation counts on crossing ball screw thread peak along internal return retainer.

☒Fits to short lead thin shaft needs.

☒Performed by high rigidity & secured by steel material been heat-treatment.

Extened Usage Life

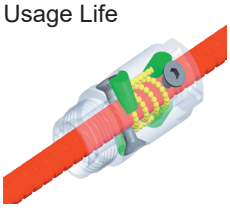

## ◎Extened Usage Life

Reliable Internal Circulation Structure

☒Ball run endless inside along the internal circulation retainer.

☒Fits to short lead thin shaft needs.

☒Retainer in POM adapted to increase reliability & decrease noise.

Low Temperature
Black & Chrome Plating

## ◎Surface Treatment-Low Temperature Black & Chrome Plating

| Hardness | Color | Thickness of Layer | Material Applicability | Characteristics |
|---|---|---|---|---|
| 800HV | Black Extinction | 1~2μm | Steel<br>Copper<br>Stainless Steel | 1. Good corrosion<br>2. Rust proof<br>3. Abrasion proof<br>4. Ultra thin layer |

## ◎Salt Spray Test

| | Thickness of Layer (μm) | Corrosion Proof (hr) |
|---|---|---|
| Brand A | 2.5 | 48 |
| Brand B | 1.75 | 96 |
| Brand C | 2 | 96 |
| GOOYII | 2 | 120 |

## GOOBS Series Model Numbers

### Model Number Decsription GOOBS□□ Series

| Ref. | |
|---|---|
| Ball Screw | |

| Machining Process | |
|---|---|
| G | Ground |
| R | Rolled |

| Accuracy |
|---|
| C5 |
| C7 |

Thread Length

Full Length

| Ball Nut | |
|---|---|
| H | Rectangular |
| M | Threaded |
| F | Flanged |

| Surface Finish | |
|---|---|
| Non | |
| F | Low Temperature Black Chrome Plating |

GOOBS 06 01 KS - R C7 □ - 900 R 1000 - H - □

| Nominacl Dia. |
|---|
| 06 |
| 08 |
| 10 |

| Lead |
|---|
| 01 |
| 02 |
| 04 |
| 05 |
| 06 |
| 08 |
| 10 |

| Circulation Types | |
|---|---|
| D1 | Internal Return=1.7 returns per circuit |
| D2 | Internal Return=1.7 returns x 2 circuits |
| D3 | Internal Return=2.7 returns per circuit |
| KS | Internal Return Key Way=3 returns per circuit |

| Axial Backlash | |
|---|---|
| X | (0mm) Preloaded |
| Y | (0.005mm) under |
| Z | (0.01mm) under |

| Thread Direction | |
|---|---|
| R | Right |

## ◎Models

Threaded

Flanged

Rectangular

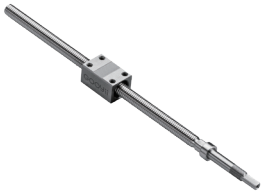

Threaded Type
End Shaft w/o machining

Flanged Type
End Shaft w/o machining

Retangular Type
End Shaft w/o machining

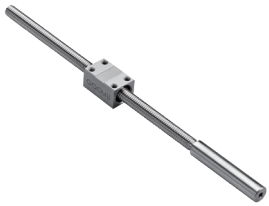

# GOOBS0601-F

| Rolled Ball Screws | | | | |
|---|---|---|---|---|
| Nominal Dia(mm) | 6 | | | |
| Ball Dia(mm) | 0.8 | | | |
| Lead(mm) | 1 | | | |
| B.C.D(mm) | 6.2 | | | |
| Thread Direction | Right Hand | | | |
| Circuits | 1 Return x 3 Circuits | | | |
| Accuracy | C5X | C5Y | C7Y | C7Z |
| Axial Backlash | 0 | < 0.005 | < 0.005 | < 0.01 |
| Dynamic Load Ca(N) | 550 | | | |
| Max. Static Load Coa(N) | 930 | | | |

plating

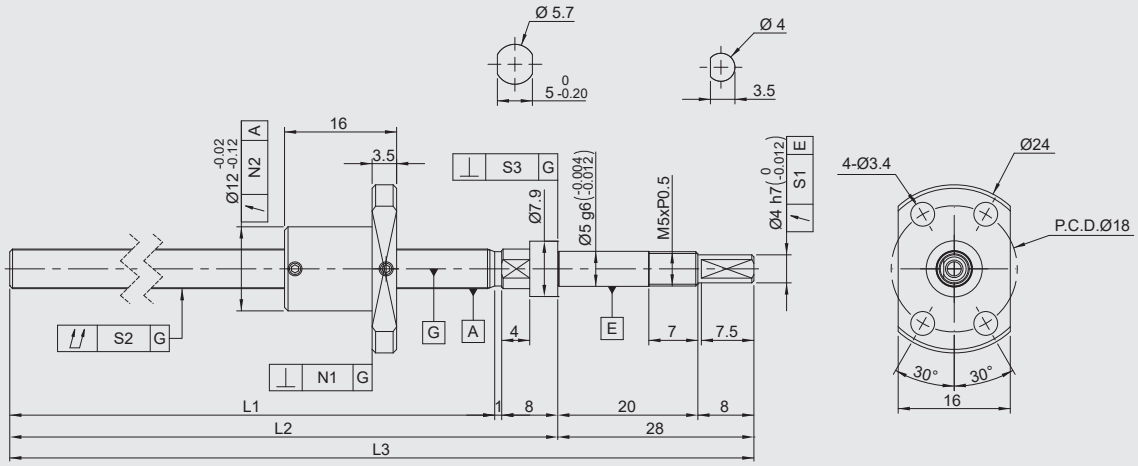


| Specification | Stroke | Shaft Length | | | Deviation Tolerance | Cumulative Deviation Tolerance | Bearing Seat Verticality Tolerance | Flanged Nut Verticality | Nut Deviation Tolerance | Lead Accuracy | |
|---|---|---|---|---|---|---|---|---|---|---|---|
| | | L1 | L2 | L3 | S1 | S2 | S3 | N1 | N2 | Mean Travel | Variation |
| GOOBS0601KS-RC5□-65R102-F | 40 | 65 | 74 | 102 | 0.01 | 0.035 | 0.005 | 0.01 | 0.012 | 0.018 | 0.018 |
| GOOBS0601KS-RC7□-65R102-F | | | | | 0.014 | 0.045 | 0.007 | 0.014 | 0.02 | Travel Distance:±0.05/300 | |
| GOOBS0601KS-RC5□-95R132-F | 70 | 95 | 104 | 132 | 0.01 | 0.035 | 0.005 | 0.01 | 0.012 | 0.018 | 0.018 |
| GOOBS0601KS-RC7□-95R132-F | | | | | 0.014 | 0.045 | 0.007 | 0.014 | 0.02 | Travel Distance:±0.05/300 | |
| GOOBS0601KS-RC5□-125R162-F | 100 | 125 | 134 | 162 | 0.01 | 0.035 | 0.005 | 0.01 | 0.012 | 0.02 | 0.018 |
| GOOBS0601KS-RC7□-125R162-F | | | | | 0.014 | 0.045 | 0.007 | 0.014 | 0.02 | Travel Distance:±0.05/300 | |

# GOOBS0601-F Machining-less to the end shaft

| Rolled Ball Screws | | | | |
|---|---|---|---|---|
| Nominal Dia(mm) | 6 | | | |
| Ball Dia(mm) | 0.8 | | | |
| Lead(mm) | 1 | | | |
| B.C.D(mm) | 6.2 | | | |
| Thread Direction | Right Hand | | | |
| Circuits | 1 Return x 3 Circuits | | | |
| Accuracy | C5X | C5Y | C7Y | C7Z |
| Axial Backlash | 0 | < 0.005 | < 0.005 | < 0.01 |
| Dynamic Load Ca(N) | 550 | | | |
| Max. Static Load Coa(N) | 930 | | | |

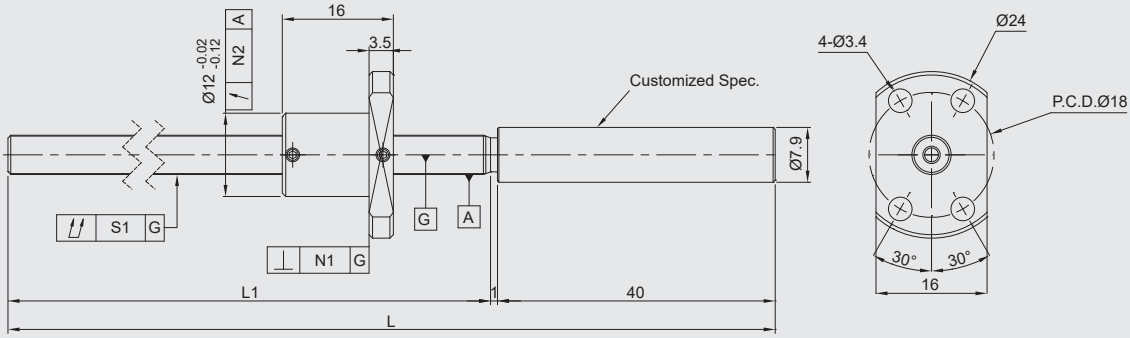


| Specification | Stroke | Shaft Length | | Cumulative Deviation Tolerance | Flanged Nut Verticality | Nut Deviation Tolerance | Lead Accuracy | |
|---|---|---|---|---|---|---|---|---|
| | | L1 | L | S1 | N1 | N2 | Mean Travel | Variation |
| GOOBS0601KS-RC5□-65R106-F | 40 | 65 | 106 | 0.035 | 0.01 | 0.012 | 0.018 | 0.018 |
| GOOBS0601KS-RC7□-65R106-F | | | | 0.045 | 0.014 | 0.02 | Travel Distance：±0.05/300 | |
| GOOBS0601KS-RC5□-95R136-F | 70 | 95 | 136 | 0.035 | 0.01 | 0.012 | 0.018 | 0.018 |
| GOOBS0601KS-RC7□-95R136-F | | | | 0.045 | 0.014 | 0.02 | Travel Distance：±0.05/300 | |
| GOOBS0601KS-RC5□-125R166-F | 100 | 125 | 166 | 0.035 | 0.01 | 0.012 | 0.02 | 0.018 |
| GOOBS0601KS-RC7□-125R166-F | | | | 0.045 | 0.014 | 0.02 | Travel Distance：±0.05/300 | |

# GOOBS0601-H

| Rolled Ball Screws | | | | |
|---|---|---|---|---|
| Nominal Dia(mm) | 6 | | | |
| Ball Dia(mm) | 0.8 | | | |
| Lead(mm) | 1 | | | |
| B.C.D(mm) | 6.2 | | | |
| Thread Direction | Right Hand | | | |
| Circuits | 1 Return x 3 Circuits | | | |
| Accuracy | C5X | C5Y | C7Y | C7Z |
| Axial Backlash | 0 | < 0.005 | < 0.005 | < 0.01 |
| Dynamic Load Ca(N) | 550 | | | |
| Max. Static Load Coa(N) | 930 | | | |

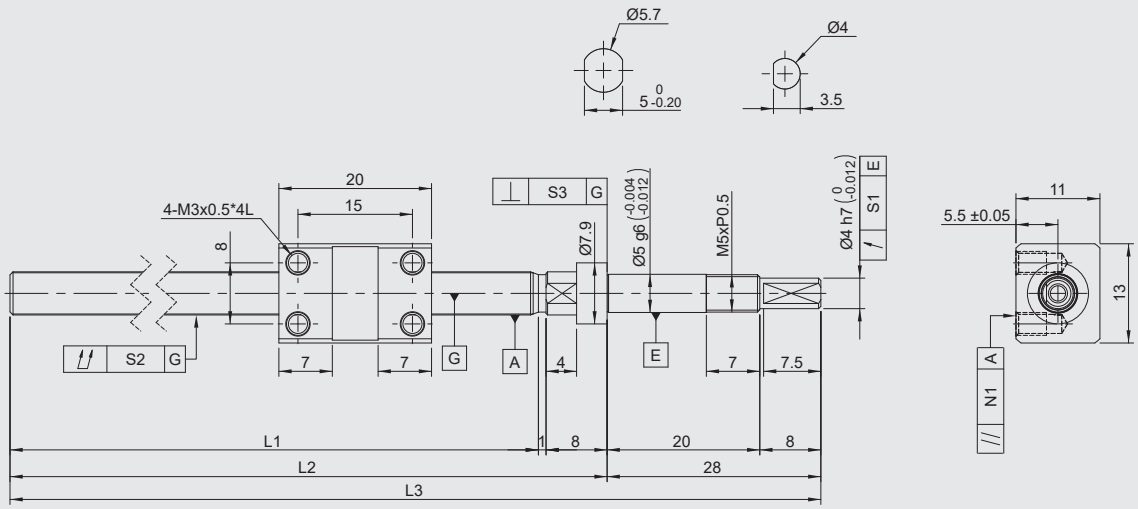


| Specification | Stroke | Shaft Length | | | Deviation Tolerance | Cumulative Deviation Tolerance | Bearing Seat Verticality Tolerance | Nut Parallelism Tolerance | Lead Accuracy | |
|---|---|---|---|---|---|---|---|---|---|---|
| | | L1 | L2 | L3 | S1 | S2 | S3 | N1 | Mean Travel | Variation |
| GOOBS0601KS-RC5□-65R102-H | 40 | 65 | 74 | 102 | 0.01 | 0.035 | 0.005 | 0.01 | 0.018 | 0.018 |
| GOOBS0601KS-RC7□-65R102-H | | | | | 0.014 | 0.045 | 0.007 | 0.017 | Travel Distance：±0.05/300 | |
| GOOBS0601KS-RC5□-95R132-H | 70 | 95 | 104 | 132 | 0.01 | 0.035 | 0.005 | 0.01 | 0.018 | 0.018 |
| GOOBS0601KS-RC7□-95R132-H | | | | | 0.014 | 0.045 | 0.007 | 0.017 | Travel Distance：±0.05/300 | |
| GOOBS0601KS-RC5□-125R162-H | 100 | 125 | 134 | 162 | 0.01 | 0.035 | 0.005 | 0.01 | 0.02 | 0.018 |
| GOOBS0601KS-RC7□-125R162-H | | | | | 0.014 | 0.045 | 0.007 | 0.017 | Travel Distance：±0.05/300 | |

# GOOBS0601-H Machining-less to the end shaft

| Rolled Ball Screws | | | | |
|---|---|---|---|---|
| Nominal Dia(mm) | 6 | | | |
| Ball Dia(mm) | 0.8 | | | |
| Lead(mm) | 1 | | | |
| B.C.D(mm) | 6.2 | | | |
| Thread Direction | Right Hand | | | |
| Circuits | 1 Return x 3 Circuits | | | |
| Accuracy | C5X | C5Y | C7Y | C7Z |
| Axial Backlash | 0 | < 0.005 | < 0.005 | < 0.01 |
| Dynamic Load Ca(N) | 550 | | | |
| Max. Static Load Coa(N) | 930 | | | |

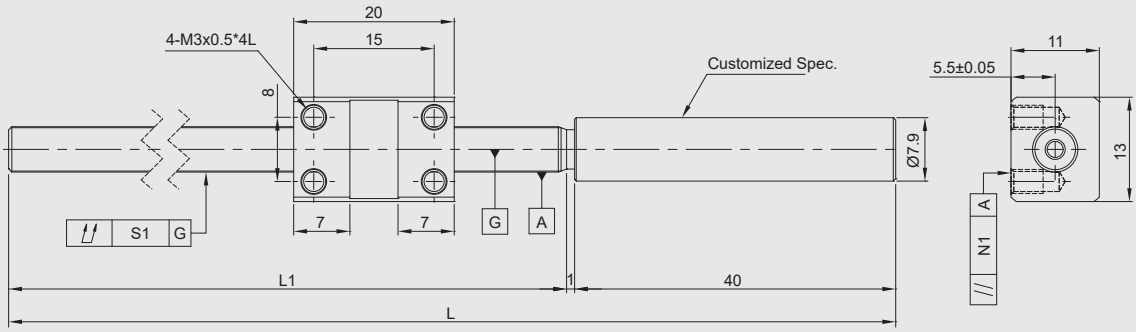


| Specification | Stroke | Shaft Length | | Cumulative Deviation Tolerance | Nut Parallelism Tolerance | Lead Accuracy | |
|---|---|---|---|---|---|---|---|
| | | L1 | L | S1 | N1 | Mean Travel | Variation |
| GOOBS0601KS-RC5□-65R106-H | 40 | 65 | 106 | 0.035 | 0.01 | 0.018 | 0.018 |
| GOOBS0601KS-RC7□-65R106-H | | | | 0.045 | 0.017 | Travel Distance：±0.05/300 | |
| GOOBS0601KS-RC5□-95R136-H | 70 | 95 | 136 | 0.035 | 0.01 | 0.018 | 0.018 |
| GOOBS0601KS-RC7□-95R136-H | | | | 0.045 | 0.017 | Travel Distance：±0.05/300 | |
| GOOBS0601KS-RC5□-125R166-H | 100 | 125 | 166 | 0.035 | 0.01 | 0.02 | 0.018 |
| GOOBS0601KS-RC7□-125R166-H | | | | 0.045 | 0.017 | Travel Distance：±0.05/300 | |

# GOOBS0601-M

| Rolled Ball Screw | | | | |
|---|---|---|---|---|
| Nominal Dia(mm) | 6 | | | |
| Ball Dia(mm) | 0.8 | | | |
| Lead(mm) | 1 | | | |
| B.C.D(mm) | 6.2 | | | |
| Thread Direction | Right Hand | | | |
| Circuits | 1 Return x 3 Circuits | | | |
| Accuracy | C5X | C5Y | C7Y | C7Z |
| Axial Backlash | 0 | < 0.005 | < 0.005 | < 0.01 |
| Dynamic Load Ca(N) | 550 | | | |
| Max. Static Load Coa(N) | 930 | | | |

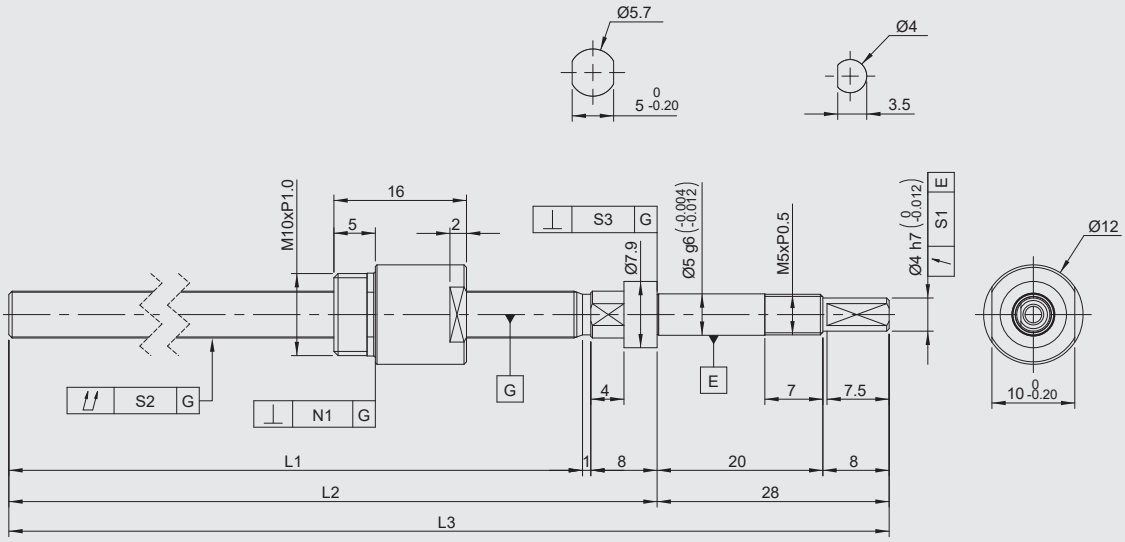


| Specification | Stroke | Shaft Length | | | Deviation Tolerance | Cumulative Deviation Tolerance | Bearing Seat Verticality Tolerance | Nut Verticality Tolerance | Lead Accuracy | |
|---|---|---|---|---|---|---|---|---|---|---|
| | | L1 | L2 | L3 | S1 | S2 | S3 | N1 | Mean Travel | Variation |
| GOOBS0601KS-RC5□-65R102-M | 40 | 65 | 74 | 102 | 0.01 | 0.035 | 0.005 | 0.01 | 0.018 | 0.018 |
| GOOBS0601KS-RC7□-65R102-M | | | | | 0.014 | 0.045 | 0.007 | 0.014 | Travel Distance :±0.05/300 | |
| GOOBS0601KS-RC5□-95R132-M | 70 | 95 | 104 | 132 | 0.01 | 0.035 | 0.005 | 0.01 | 0.018 | 0.018 |
| GOOBS0601KS-RC7□-95R132-M | | | | | 0.014 | 0.045 | 0.007 | 0.014 | Travel Distance :±0.05/300 | |
| GOOBS0601KS-RC5□-125R162-M | 100 | 125 | 134 | 162 | 0.01 | 0.035 | 0.005 | 0.01 | 0.02 | 0.018 |
| GOOBS0601KS-RC7□-125R162-M | | | | | 0.014 | 0.045 | 0.007 | 0.014 | Travel Distance :±0.05/300 | |

# GOOBS0601-M Machining-less to the end shaft

| Rolled Ball Screw | | | | |
|---|---|---|---|---|
| Nominal Dia(mm) | 6 | | | |
| Ball Dia(mm) | 0.8 | | | |
| Lead(mm) | 1 | | | |
| B.C.D(mm) | 6.2 | | | |
| Thread Direction | Right Hand | | | |
| Circuits | 1 Return x 3 Circuits | | | |
| Accuracy | C5X | C5Y | C7Y | C7Z |
| Axial Backlash | 0 | < 0.005 | < 0.005 | < 0.01 |
| Dynamic Load Ca(N) | 550 | | | |
| Max. Static Load Coa(N) | 930 | | | |

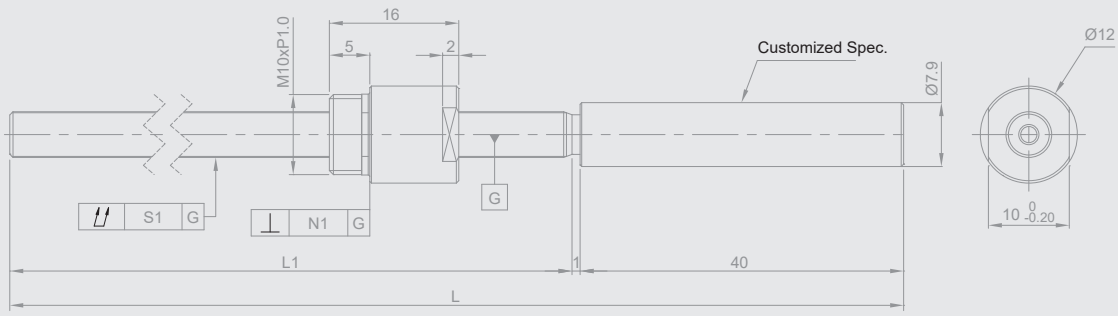


| Specification | Stroke | Shaft Length | | Cumulative Deviation Tolerance | Nut Verticality Tolerance | Lead Accuracy | |
|---|---|---|---|---|---|---|---|
| | | L1 | L | S1 | N1 | Mean Travel | Variation |
| GOOBS0601KS-RC5□-65R106-M | 40 | 65 | 106 | 0.035 | 0.01 | 0.018 | 0.018 |
| GOOBS0601KS-RC7□-65R106-M | | | | 0.045 | 0.014 | Travel Distance :±0.05/300 | |
| GOOBS0601KS-RC5□-95R136-M | 70 | 95 | 136 | 0.035 | 0.01 | 0.018 | 0.018 |
| GOOBS0601KS-RC7□-95R136-M | | | | 0.045 | 0.014 | Travel Distance :±0.05/300 | |
| GOOBS0601KS-RC5□-125R166-M | 100 | 125 | 166 | 0.035 | 0.01 | 0.02 | 0.018 |
| GOOBS0601KS-RC7□-125R166-M | | | | 0.045 | 0.014 | Travel Distance :±0.05/300 | |

# GOOBS0602-F

| Rolled Ball Screw | | | | |
|---|---|---|---|---|
| Nominal Dia(mm) | 6 | | | |
| Ball Dia(mm) | 0.8 | | | |
| Lead(mm) | 2 | | | |
| B.C.D(mm) | 6.2 | | | |
| Thread Direction | Right Hand | | | |
| Circuits | 1 Return x 3 Circuits | | | |
| Accuracy | C5X | C5Y | C7Y | C7Z |
| Axial Backlash | 0 | < 0.005 | < 0.005 | < 0.01 |
| Dynamic Load Ca(N) | 550 | | | |
| Max. Static Load Coa(N) | 930 | | | |

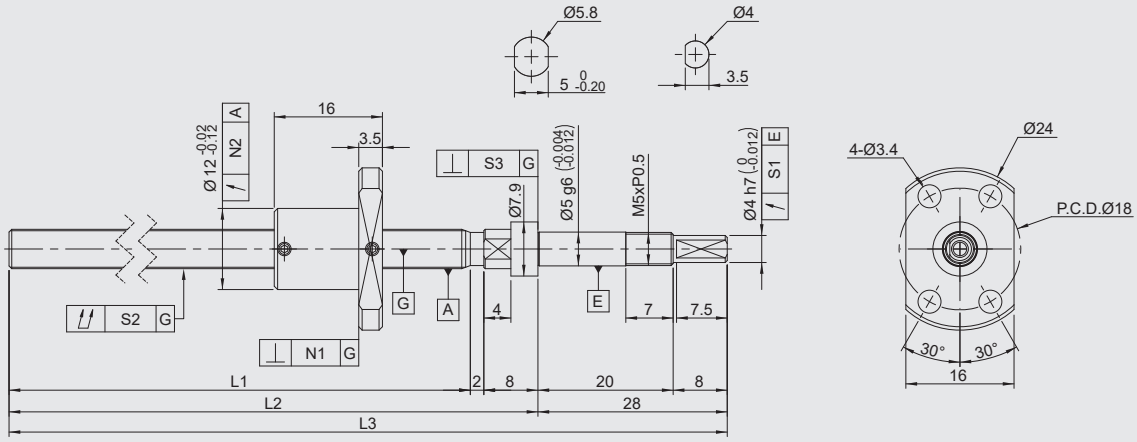


| Specification | Stroke | Shaft Length | | | Deviation Tolerance | Cumulative Deviation Tolerance | Bearing Seat Verticality Tolerance | Flanged Nut Verticality | Nut Deviation Tolerance | Lead Accuracy | |
|---|---|---|---|---|---|---|---|---|---|---|---|
| | | L1 | L2 | L3 | S1 | S2 | S3 | N1 | N2 | Mean Travel | Variation |
| GOOBS0602KS-RC5□-65R103-F | 40 | 65 | 75 | 103 | 0.01 | 0.035 | 0.005 | 0.01 | 0.012 | 0.018 | 0.018 |
| GOOBS0602KS-RC7□-65R103-F | | | | | 0.014 | 0.045 | 0.007 | 0.014 | 0.02 | Travel Distance :±0.05/300 | |
| GOOBS0602KS-RC5□-95R133-F | 70 | 95 | 105 | 133 | 0.01 | 0.035 | 0.005 | 0.01 | 0.012 | 0.018 | 0.018 |
| GOOBS0602KS-RC7□-95R133-F | | | | | 0.014 | 0.045 | 0.007 | 0.014 | 0.02 | Travel Distance :±0.05/300 | |
| GOOBS0602KS-RC5□-125R163-F | 100 | 125 | 132 | 163 | 0.01 | 0.035 | 0.005 | 0.01 | 0.012 | 0.02 | 0.018 |
| GOOBS0602KS-RC7□-125R163-F | | | | | 0.014 | 0.045 | 0.007 | 0.014 | 0.02 | Travel Distance :±0.05/300 | |

# GOOBS0602-F Machining-less to the end shaft

| Rolled Ball Screw | | | | |
|---|---|---|---|---|
| Nominal Dia(mm) | 6 | | | |
| Ball Dia(mm) | 0.8 | | | |
| Lead(mm) | 2 | | | |
| B.C.D(mm) | 6.2 | | | |
| Thread Direction | Right Hand | | | |
| Circuits | 1 Return x 3 Circuits | | | |
| Accuracy | C5X | C5Y | C7Y | C7Z |
| Axial Backlash | 0 | < 0.005 | < 0.005 | < 0.01 |
| Dynamic Load Ca(N) | 550 | | | |
| Max. Static Load Coa(N) | 930 | | | |

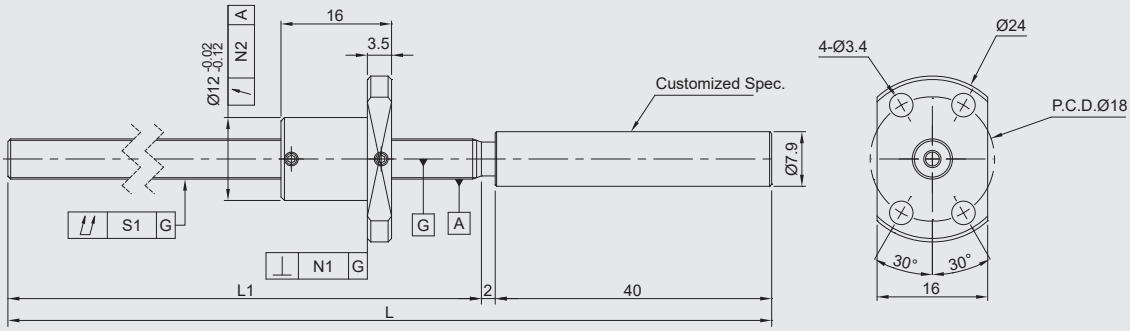


| Specification | Stroke | Shaft Length | | Cumulative Deviation Tolerance | Nut Verticality Tolerance | Nut Deviation Tolerance | Lead Accuracy | |
|---|---|---|---|---|---|---|---|---|
| | | L1 | L | S1 | N1 | N2 | Mean Travel | Variation |
| GOOBS0602KS-RC5□-65R107-F | 40 | 65 | 107 | 0.035 | 0.01 | 0.012 | 0.018 | 0.018 |
| GOOBS0602KS-RC7□-65R107-F | | | | 0.045 | 0.014 | 0.02 | Travel Distance :±0.05/300 | |
| GOOBS0602KS-RC5□-95R137-F | 70 | 95 | 137 | 0.035 | 0.01 | 0.012 | 0.018 | 0.018 |
| GOOBS0602KS-RC7□-95R137-F | | | | 0.045 | 0.014 | 0.02 | Travel Distance :±0.05/300 | |
| GOOBS0602KS-RC5□-125R167-F | 100 | 125 | 167 | 0.035 | 0.01 | 0.012 | 0.02 | 0.018 |
| GOOBS0602KS-RC7□-125R167-F | | | | 0.045 | 0.014 | 0.02 | Travel Distance :±0.05/300 | |

# GOOBS0602-H

| Rolled Ball Screw | | | | |
|---|---|---|---|---|
| Nominal Dia(mm) | 6 | | | |
| Ball Dia(mm) | 0.8 | | | |
| Lead(mm) | 2 | | | |
| B.C.D(mm) | 6.2 | | | |
| Thread Direction | Right Hand | | | |
| Circuits | 1 Return x 3 Circuits | | | |
| Accuracy | C5X | C5Y | C7Y | C7Z |
| Axial Backlash | 0 | < 0.005 | < 0.005 | < 0.01 |
| Dynamic Load Ca(N) | 550 | | | |
| Max. Static Load Coa(N) | 930 | | | |

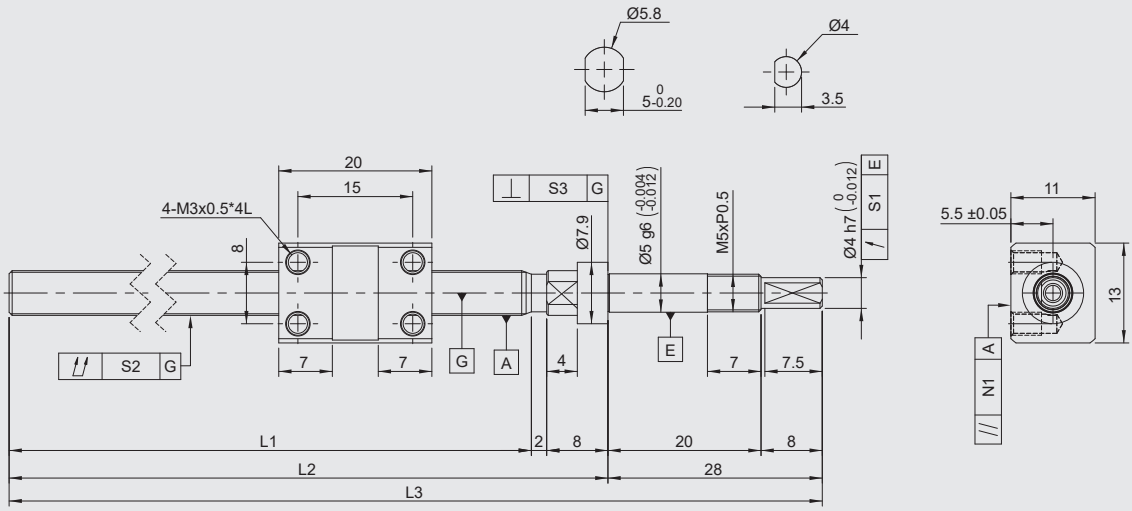


| Specification | Stroke | Shaft Length | | | Deviation Tolerance | Cumulative Deviation Tolerance | Bearing Seat Verticality Tolerance | Nut Parallelism Tolerance | Lead Accuracy | |
|---|---|---|---|---|---|---|---|---|---|---|
| | | L1 | L2 | L3 | S1 | S2 | S3 | N1 | Mean Travel | Variation |
| GOOBS0602KS-RC5□-65R103-H | 40 | 65 | 75 | 103 | 0.01 | 0.035 | 0.005 | 0.01 | 0.018 | 0.018 |
| GOOBS0602KS-RC7□-65R103-H | | | | | 0.014 | 0.045 | 0.007 | 0.017 | Travel Distance :±0.05/300 | |
| GOOBS0602KS-RC5□-95R133-H | 70 | 95 | 105 | 133 | 0.01 | 0.035 | 0.005 | 0.01 | 0.018 | 0.018 |
| GOOBS0602KS-RC7□-95R133-H | | | | | 0.014 | 0.045 | 0.007 | 0.017 | Travel Distance :±0.05/300 | |
| GOOBS0602KS-RC5□-125R163-H | 100 | 125 | 135 | 163 | 0.01 | 0.035 | 0.005 | 0.01 | 0.02 | 0.018 |
| GOOBS0602KS-RC7□-125R163-H | | | | | 0.014 | 0.045 | 0.007 | 0.017 | Travel Distance :±0.05/300 | |

# GOOBS0602-H Machining-less to the end shaft

| Rolled Ball Screw | | | | |
|---|---|---|---|---|
| Nominal Dia(mm) | 6 | | | |
| Ball Dia(mm) | 0.8 | | | |
| Lead(mm) | 2 | | | |
| B.C.D(mm) | 6.2 | | | |
| Thread Direction | Right Hand | | | |
| Circuits | 1 Return x 3 Circuits | | | |
| Accuracy | C5X | C5Y | C7Y | C7Z |
| Axial Backlash | 0 | < 0.005 | < 0.005 | < 0.01 |
| Dynamic Load Ca(N) | 550 | | | |
| Max. Static Load Coa(N) | 930 | | | |

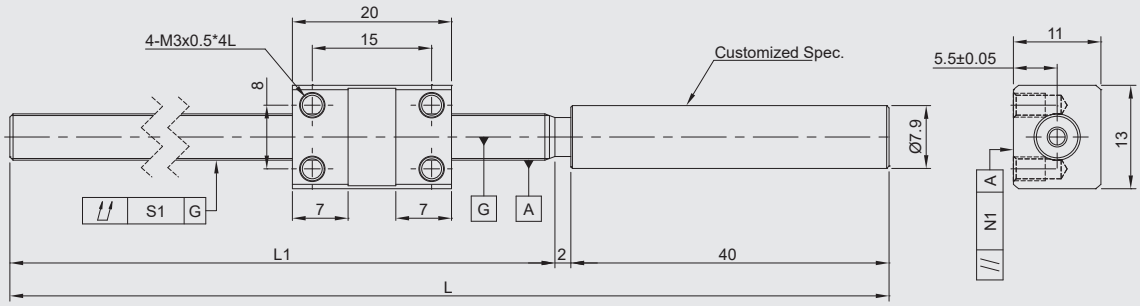


| Specification | Stroke | Shaft Length | | Cumulative Deviation Tolerance | Nut Parallelism Tolerance | Lead Accuracy | |
|---|---|---|---|---|---|---|---|
| | | L1 | L | S1 | N1 | Mean Travel | Variation |
| GOOBS0602KS-RC5□-65R107-H | 40 | 65 | 107 | 0.035 | 0.01 | 0.018 | 0.018 |
| GOOBS0602KS-RC7□-65R107-H | | | | 0.045 | 0.017 | Travel Distance：±0.05/300 | |
| GOOBS0602KS-RC5□-95R137-H | 70 | 95 | 137 | 0.035 | 0.01 | 0.018 | 0.018 |
| GOOBS0602KS-RC7□-95R133-H | | | | 0.045 | 0.017 | Travel Distance：±0.05/300 | |
| GOOBS0602KS-RC5□-125R167-H | 100 | 125 | 167 | 0.035 | 0.01 | 0.02 | 0.18 |
| GOOBS0602KS-RC7□-125R167-H | | | | 0.045 | 0.017 | Travel Distance：±0.05/300 | |

# GOOBS0602-M

| Rolled Ball Screw | | | | |
|---|---|---|---|---|
| Nominal Dia(mm) | 6 | | | |
| Ball Dia(mm) | 0.8 | | | |
| Lead(mm) | 2 | | | |
| B.C.D(mm) | 6.2 | | | |
| Thread Direction | Right Hand | | | |
| Circuits | 1 Return x 3 Circuits | | | |
| Accuracy | C5X | C5Y | C7Y | C7Z |
| Axial Backlash | 0 | < 0.005 | < 0.005 | < 0.01 |
| Dynamic Load Ca(N) | 550 | | | |
| Max. Static Load Coa(N) | 930 | | | |

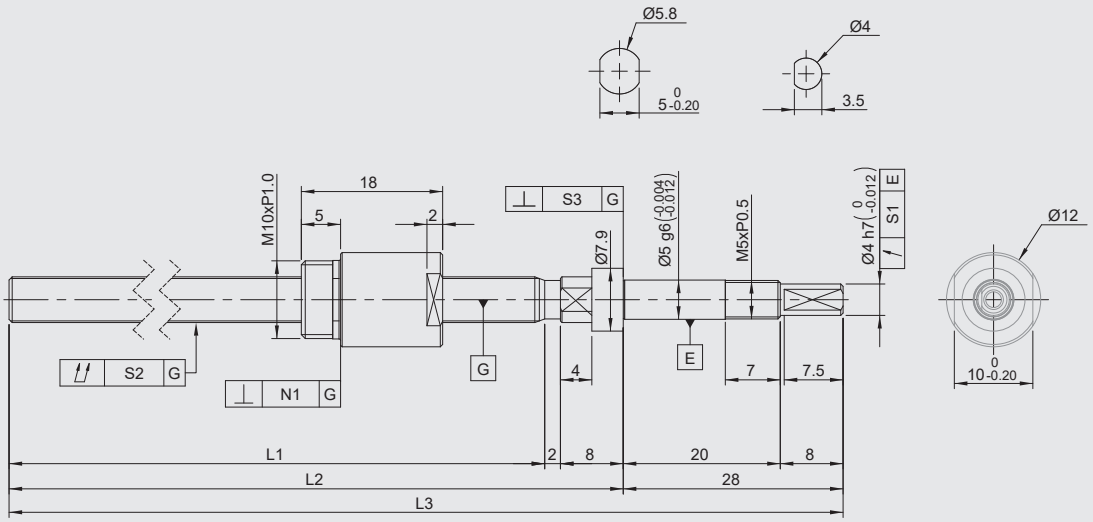


| Specification | Stroke | Shaft Length | | | Deviation Tolerance | Cumulative Deviation Tolerance | Bearing Seat Verticality Tolerance | Nut Verticality Tolerance | Lead Accuracy | |
|---|---|---|---|---|---|---|---|---|---|---|
| | | L1 | L2 | L3 | S1 | S2 | S3 | N1 | Mean Travel | Variation |
| BS0602KS-RC5□-65R103-M | 40 | 65 | 75 | 103 | 0.01 | 0.035 | 0.005 | 0.01 | 0.018 | 0.018 |
| BS0602KS-RC7□-65R103-M | | | | | 0.014 | 0.045 | 0.007 | 0.014 | Travel Distance :±0.05/300 | |
| BS0602KS-RC5□-95R133-M | 70 | 95 | 105 | 133 | 0.01 | 0.035 | 0.005 | 0.01 | 0.018 | 0.018 |
| BS0602KS-RC7□-95R133-M | | | | | 0.014 | 0.045 | 0.007 | 0.014 | Travel Distance :±0.05/300 | |
| BS0602KS-RC5□-125R163-M | 100 | 125 | 135 | 163 | 0.01 | 0.035 | 0.005 | 0.01 | 0.02 | 0.018 |
| BS0602KS-RC7□-125R163-M | | | | | 0.014 | 0.045 | 0.007 | 0.014 | Travel Distance :±0.05/300 | |

# GOOBS0602-M Machining-less to the end shaft

| Rolled Ball Screw | | | | |
|---|---|---|---|---|
| Nominal Dia(mm) | 6 | | | |
| Ball Dia(mm) | 0.8 | | | |
| Lead(mm) | 2 | | | |
| B.C.D(mm) | 6.2 | | | |
| Thread Direction | Right Hand | | | |
| Circuits | 1 Return x 3 Circuits | | | |
| Accuracy | C5X | C5Y | C7Y | C7Z |
| Axial Backlash | 0 | < 0.005 | < 0.005 | < 0.01 |
| Dynamic Load Ca(N) | 550 | | | |
| Max. Static Load Coa(N) | 930 | | | |

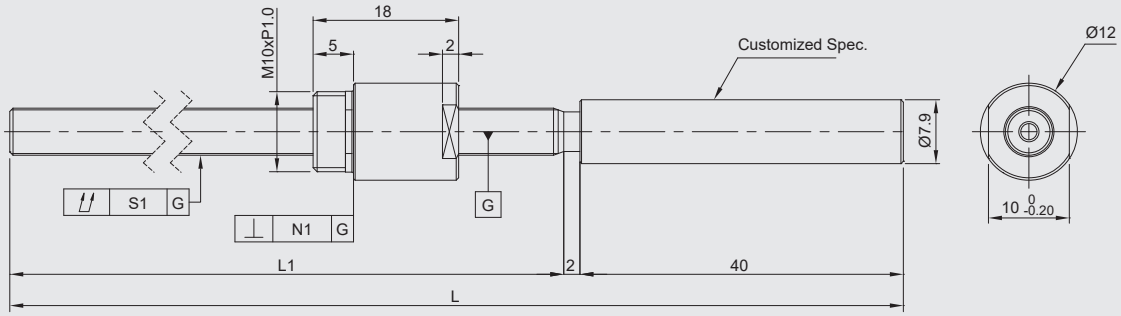


| Specification | Stroke | Shaft Length | | Cumulative Deviation Tolerance | Nut Verticality Tolerance | Lead Accuracy | |
|---|---|---|---|---|---|---|---|
| | | L1 | L | S1 | N1 | Mean Travel | Variation |
| BS0602KS-RC5□-65R107-M | 40 | 65 | 107 | 0.035 | 0.01 | 0.018 | 0.018 |
| BS0602KS-RC7□-65R107-M | | | | 0.045 | 0.014 | Travel Distance：±0.05/300 | |
| BS0602KS-RC5□-95R137-M | 70 | 95 | 137 | 0.035 | 0.01 | 0.018 | 0.018 |
| BS0602KS-RC7□-95R137-M | | | | 0.045 | 0.014 | Travel Distance：±0.05/300 | |
| BS0602KS-RC5□-125R167-M | 100 | 125 | 167 | 0.035 | 0.01 | 0.02 | 0.018 |
| BS0602KS-RC7□-125R167-M | | | | 0.045 | 0.014 | Travel Distance：±0.05/300 | |

# GOOBS0604-F

| Rolled Ball Screw | | | | |
|---|---|---|---|---|
| Nominal Dia(mm) | 6 | | | |
| Ball Dia(mm) | 1.2 | | | |
| Lead(mm) | 4 | | | |
| B.C.D(mm) | 6.3 | | | |
| Thread Direction | Right Hand | | | |
| Circuits | 2.7 Returns x 1 Circuit | | | |
| Accuracy | C5X | C5Y | C7Y | C7Z |
| Axial Backlash | 0 | < 0.005 | < 0.005 | < 0.01 |
| Dynamic Load Ca(N) | 1050 | | | |
| Max. Static Load Coa(N) | 1540 | | | |

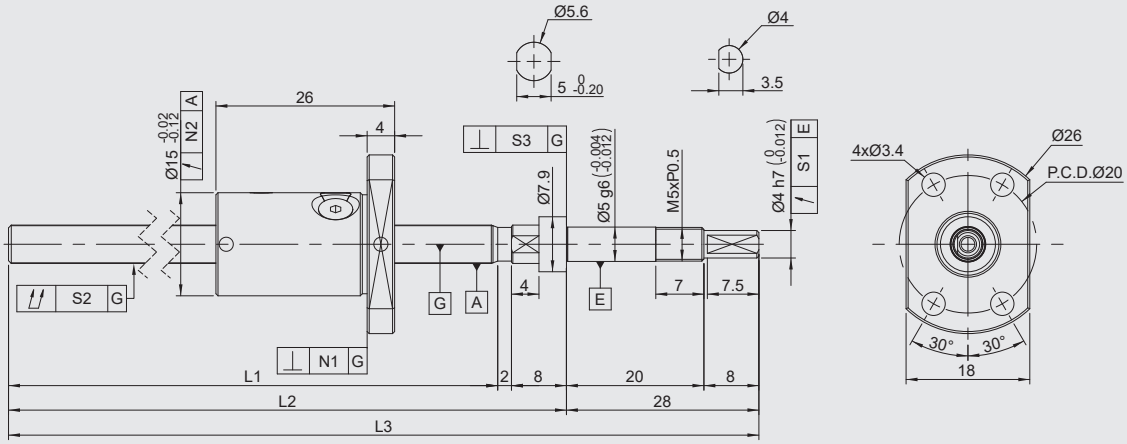


| Specification | Stroke | Shaft Length | | | Deviation Tolerance | Cumulative Deviation Tolerance | Bearing Seat Verticality Tolerance | Flanged Nut Verticality | Nut Deviation Tolerance | Lead Accuracy | |
|---|---|---|---|---|---|---|---|---|---|---|---|
| | | L1 | L2 | L3 | S1 | S2 | S3 | N1 | N2 | Mean Travel | Variation |
| GOOBS0604D3-RC5□-75R113-F | 45 | 75 | 85 | 113 | 0.01 | 0.035 | 0.005 | 0.01 | 0.012 | 0.018 | 0.018 |
| GOOBS0604D3-RC7□-75R113-F | | | | | 0.014 | 0.045 | 0.007 | 0.014 | 0.02 | Travel Distance:±0.05/300 | |
| GOOBS0604D3-RC5□-105R143-F | 75 | 105 | 115 | 143 | 0.01 | 0.035 | 0.005 | 0.01 | 0.012 | 0.018 | 0.018 |
| GOOBS0604D3-RC7□-105R143-F | | | | | 0.014 | 0.045 | 0.007 | 0.014 | 0.02 | Travel Distance:±0.05/300 | |
| GOOBS0604D3-RC5□-130R168-F | 100 | 130 | 140 | 168 | 0.01 | 0.035 | 0.005 | 0.01 | 0.012 | 0.02 | 0.018 |
| GOOBS0604D3-RC7□-130R168-F | | | | | 0.014 | 0.045 | 0.007 | 0.014 | 0.02 | Travel Distance:±0.05/300 | |

# GOOBS0604-F Machining-less to the end shaft

| Rolled Ball Screw | | | | |
|---|---|---|---|---|
| Nominal Dia(mm) | 6 | | | |
| Ball Dia(mm) | 1.2 | | | |
| Lead(mm) | 4 | | | |
| B.C.D(mm) | 6.3 | | | |
| Thread Direction | Right Hand | | | |
| Circuits | 2.7 Returns x 1 Circuit | | | |
| Accuracy | C5X | C5Y | C7Y | C7Z |
| Axial Backlash | 0 | < 0.005 | < 0.005 | < 0.01 |
| Dynamic Load Ca(N) | 1050 | | | |
| Max. Static Load Coa(N) | 1540 | | | |

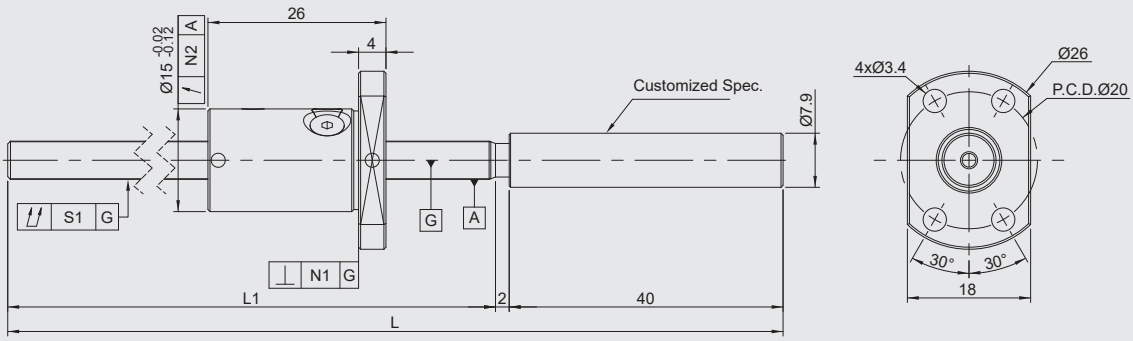


| Specification | Stroke | Shaft Length | | Cumulative Deviation Tolerance | Flanged Nut Verticality | Nut Deviation Tolerance | Lead Accuracy | |
|---|---|---|---|---|---|---|---|---|
| | | L1 | L | S1 | N1 | N2 | Mean Travel | Variation |
| GOOBS0604D3-RC5□-75R117-F | 45 | 75 | 117 | 0.035 | 0.01 | 0.012 | 0.018 | 0.018 |
| GOOBS0604D3-RC7□-75R117-F | | | | 0.045 | 0.014 | 0.02 | Travel Distance：±0.05/300 | |
| GOOBS0604D3-RC5□-105R147-F | 75 | 105 | 147 | 0.035 | 0.01 | 0.012 | 0.018 | 0.018 |
| GOOBS0604D3-RC7□-105R147-F | | | | 0.045 | 0.014 | 0.02 | Travel Distance：±0.05/300 | |
| GOOBS0604D3-RC5□-130R172-F | 100 | 130 | 172 | 0.035 | 0.01 | 0.012 | 0.02 | 0.018 |
| GOOBS0604D3-RC7□-130R172-F | | | | 0.045 | 0.014 | 0.02 | Travel Distance：±0.05/300 | |

# GOOBS0604-M

| Rolled Ball Screw | | | | |
|---|---|---|---|---|
| Nominal Dia(mm) | 6 | | | |
| Ball Dia(mm) | 1.2 | | | |
| Lead(mm) | 4 | | | |
| B.C.D(mm) | 6.3 | | | |
| Thread Direction | Right Hand | | | |
| Circuits | 2.7 Returns x 1 Circuit | | | |
| Accuracy | C5X | C5Y | C7Y | C7Z |
| Axial Backlash | 0 | < 0.005 | < 0.005 | < 0.01 |
| Dynamic Load Ca(N) | 1050 | | | |
| Max. Static Load Coa(N) | 1540 | | | |

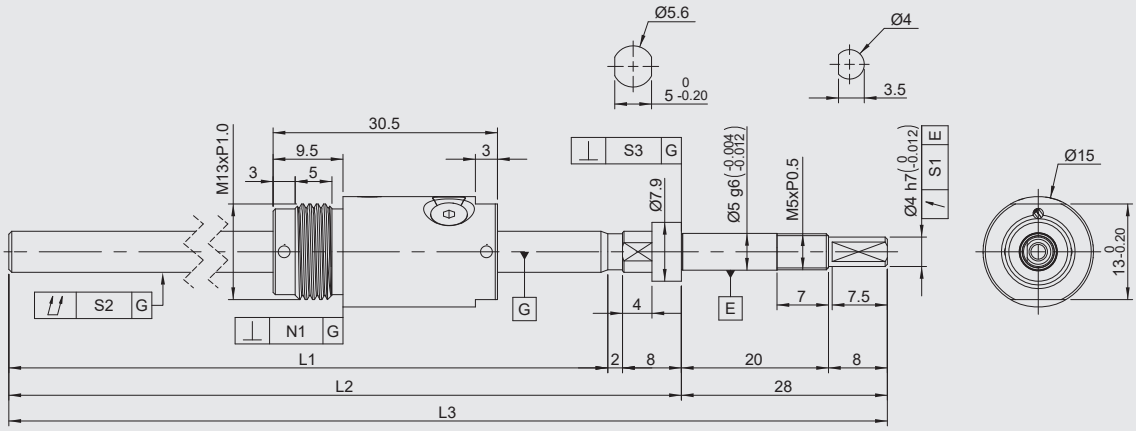


| Specification | Stroke | Shaft Length | | | Deviation Tolerance | Cumulative Deviation Tolerance | Bearing Seat Verticality Tolerance | Nut Verticality Tolerance | Lead Accuracy | |
|---|---|---|---|---|---|---|---|---|---|---|
| | | L1 | L2 | L3 | S1 | S2 | S3 | N1 | Mean Travel | Variation |
| GOOBS0604D3-RC5□-75R113-M | 40 | 75 | 85 | 113 | 0.01 | 0.035 | 0.005 | 0.01 | 0.018 | 0.018 |
| GOOBS0604D3-RC7□-75R113-M | | | | | 0.014 | 0.045 | 0.007 | 0.014 | Travel Distance：±0.05/300 | |
| GOOBS0604D3-RC5□-105R143-M | 70 | 105 | 115 | 143 | 0.01 | 0.035 | 0.005 | 0.01 | 0.018 | 0.018 |
| GOOBS0604D3-RC7□-105R143-M | | | | | 0.014 | 0.045 | 0.007 | 0.014 | Travel Distance：±0.05/300 | |
| GOOBS0604D3-RC5□-130R168-M | 95 | 130 | 140 | 168 | 0.01 | 0.035 | 0.005 | 0.01 | 0.02 | 0.018 |
| GOOBS0604D3-RC7□-130R168-M | | | | | 0.014 | 0.045 | 0.007 | 0.014 | Travel Distance：±0.05/300 | |

# GOOBS0604-M Machining-less to the end shaft

| Rolled Ball Screw | | | | |
|---|---|---|---|---|
| Nominal Dia(mm) | 6 | | | |
| Ball Dia(mm) | 1.2 | | | |
| Lead(mm) | 4 | | | |
| B.C.D(mm) | 6.3 | | | |
| Thread Direction | Right Hand | | | |
| Circuits | 2.7 Returns x 1 Circuit | | | |
| Accuracy | C5X | C5Y | C7Y | C7Z |
| Axial Backlash | 0 | < 0.005 | < 0.005 | < 0.01 |
| Dynamic Load Ca(N) | 1050 | | | |
| Max. Static Load Coa(N) | 1540 | | | |

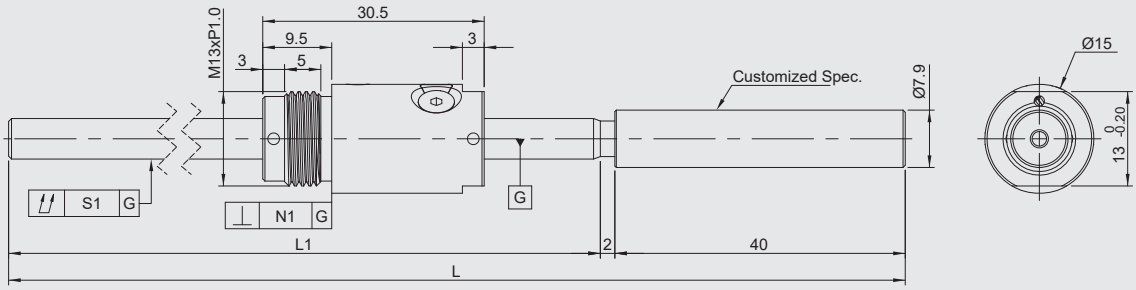


| Specification | Stroke | Shaft Length | | Cumulative Deviation Tolerance | Nut Verticality Tolerance | Lead Accuracy | |
|---|---|---|---|---|---|---|---|
| | | L1 | L | S1 | N1 | Mean Travel | Variation |
| GOOBS0604D3-RC5□-75R117-M | 40 | 75 | 117 | 0.035 | 0.01 | 0.018 | 0.018 |
| GOOBS0604D3-RC7□-75R117-M | | | | 0.045 | 0.014 | Travel Distance：±0.05/300 | |
| GOOBS0604D3-RC5□-105R147-M | 70 | 105 | 147 | 0.035 | 0.01 | 0.018 | 0.018 |
| GOOBS0604D3-RC7□-105R147-M | | | | 0.045 | 0.014 | Travel Distance：±0.05/300 | |
| GOOBS0604D3-RC5□-130R172-M | 95 | 130 | 172 | 0.035 | 0.01 | 0.02 | 0.018 |
| GOOBS0604D3-RC7□-130R172-M | | | | 0.045 | 0.014 | Travel Distance：±0.05/300 | |

# GOOBS0606-F

| Rolled Ball Screw | | | | |
|---|---|---|---|---|
| Nominal Dia(mm) | 6 | | | |
| Ball Dia(mm) | 1.2 | | | |
| Lead(mm) | 6 | | | |
| B.C.D(mm) | 6.3 | | | |
| Thread Direction | Right Hand | | | |
| Circuits | 1.7 Returns x 2 Circuits | | | |
| Accuracy | C5X | C5Y | C7Y | C7Z |
| Axial Backlash | 0 | < 0.005 | < 0.005 | < 0.01 |
| Dynamic Load Ca(N) | 1380 | | | |
| Max. Static Load Coa(N) | 1900 | | | |

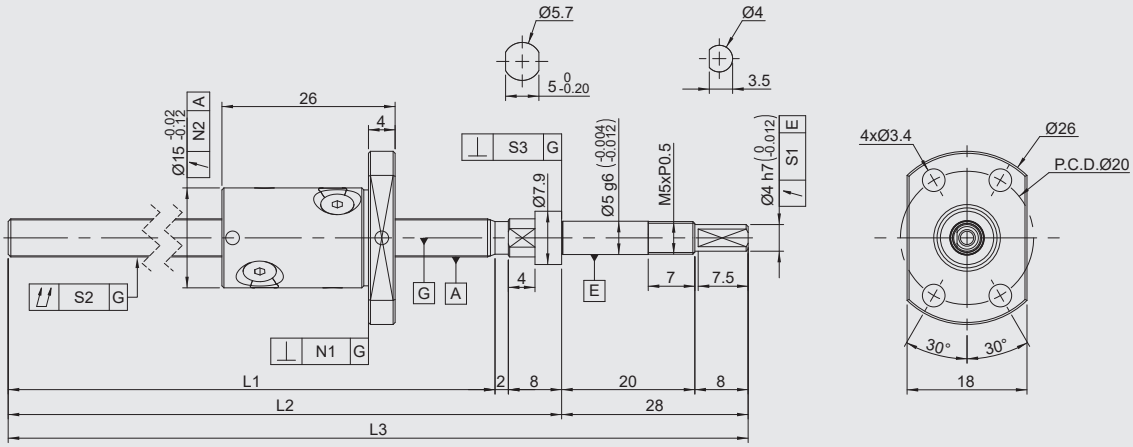


| Specification | Stroke | Shaft Length | | | Deviation Tolerance | Cumulative Deviation Tolerance | Bearing Seat Verticality Tolerance | Flanged Nut Verticality | Nut Deviation Tolerance | Lead Accuracy | |
|---|---|---|---|---|---|---|---|---|---|---|---|
| | | L1 | L2 | L3 | S1 | S2 | S3 | N1 | N2 | Mean Travel | Variation |
| GOOBS0606D2-RC5□-75R113-F | 45 | 75 | 85 | 113 | 0.01 | 0.035 | 0.005 | 0.01 | 0.012 | 0.018 | 0.018 |
| GOOBS0606D2-RC7□-75R113-F | | | | | 0.014 | 0.045 | 0.007 | 0.014 | 0.02 | Travel Distance:±0.05/300 | |
| GOOBS0606D2-RC5□-105R143-F | 75 | 105 | 115 | 143 | 0.01 | 0.035 | 0.005 | 0.01 | 0.012 | 0.018 | 0.018 |
| GOOBS0606D2-RC7□-105R143-F | | | | | 0.014 | 0.045 | 0.007 | 0.014 | 0.02 | Travel Distance:±0.05/300 | |
| GOOBS0606D2-RC5□-130R168-F | 100 | 130 | 140 | 168 | 0.01 | 0.035 | 0.005 | 0.01 | 0.012 | 0.02 | 0.018 |
| GOOBS0606D2-RC7□-130R168-F | | | | | 0.014 | 0.045 | 0.007 | 0.014 | 0.02 | Travel Distance:±0.05/300 | |

# GOOBS0606-F Machining-less to the end shaft

| Rolled Ball Screw | | | | |
|---|---|---|---|---|
| Nominal Dia(mm) | 6 | | | |
| Ball Dia(mm) | 1.2 | | | |
| Lead(mm) | 6 | | | |
| B.C.D(mm) | 6.3 | | | |
| Thread Direction | Right Hand | | | |
| Circuits | 1.7 Returns x 2 Circuits | | | |
| Accuracy | C5X | C5Y | C7Y | C7Z |
| Axial Backlash | 0 | < 0.005 | < 0.005 | < 0.01 |
| Dynamic Load Ca(N) | 1380 | | | |
| Max. Static Load Coa(N) | 1900 | | | |

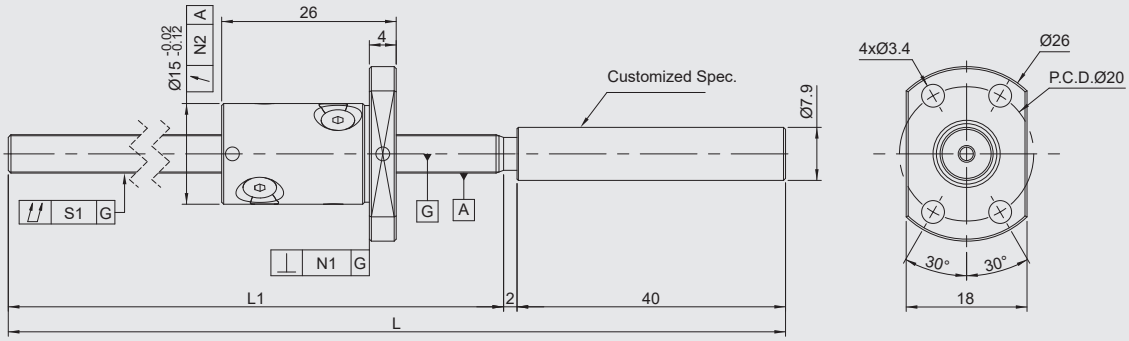


| Specification | Stroke | Shaft Length | | Cumulative Deviation Tolerance | Flanged Nut Verticality | Nut Deviation Tolerance | Lead Accuracy | |
|---|---|---|---|---|---|---|---|---|
| | | L1 | L | S1 | N1 | N2 | Mean Travel | Variation |
| GOOBS0606D2-RC5□-75R117-F | 45 | 75 | 117 | 0.035 | 0.01 | 0.012 | 0.018 | 0.018 |
| GOOBS0606D2-RC7□-75R117-F | | | | 0.045 | 0.014 | 0.02 | Travel Distance：±0.05/300 | |
| GOOBS0606D2-RC5□-105R147-F | 75 | 105 | 147 | 0.035 | 0.01 | 0.012 | 0.018 | 0.018 |
| GOOBS0606D2-RC7□-105R147-F | | | | 0.045 | 0.014 | 0.02 | Travel Distance：±0.05/300 | |
| GOOBS0606D2-RC5□-130R172-F | 100 | 130 | 172 | 0.035 | 0.01 | 0.012 | 0.02 | 0.018 |
| GOOBS0606D2-RC7□-130R172-F | | | | 0.045 | 0.014 | 0.02 | Travel Distance：±0.05/300 | |

# GOOBS0606-M

| Rolled Ball Screw | | | | |
|---|---|---|---|---|
| Nominal Dia(mm) | 6 | | | |
| Ball Dia(mm) | 1.2 | | | |
| Lead(mm) | 6 | | | |
| B.C.D(mm) | 6.3 | | | |
| Thread Direction | Right Hand | | | |
| Circuits | 1.7 Returns x 2 Circuits | | | |
| Accuracy | C5X | C5Y | C7Y | C7Z |
| Axial Backlash | 0 | < 0.005 | < 0.005 | < 0.01 |
| Dynamic Load Ca(N) | 1380 | | | |
| Max. Static Load Coa(N) | 1900 | | | |

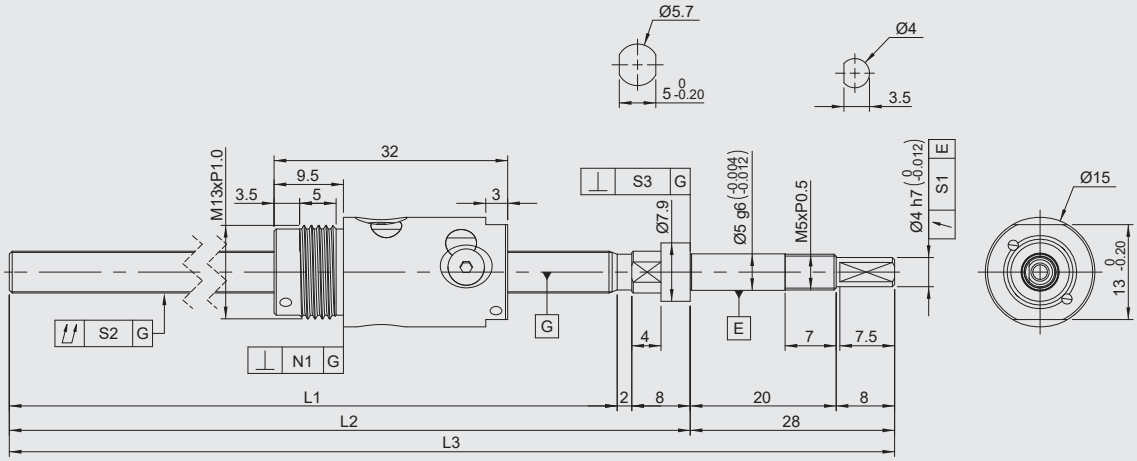


| Specification | Stroke | Shaft Length | | | Deviation Tolerance | Cumulative Deviation Tolerance | Bearing Seat Verticality Tolerance | Nut Verticality Tolerance | Lead Accuracy | |
|---|---|---|---|---|---|---|---|---|---|---|
| | | L1 | L2 | L3 | S1 | S2 | S3 | N1 | Mean Travel | Variation |
| GOOBS0606D2-RC5□-75R113-M | 40 | 75 | 85 | 113 | 0.01 | 0.035 | 0.005 | 0.01 | 0.018 | 0.018 |
| GOOBS0606D2-RC7□-75R113-M | | | | | 0.014 | 0.045 | 0.007 | 0.014 | Travel Distance：±0.05/300 | |
| GOOBS0606D2-RC5□-105R143-M | 70 | 105 | 115 | 143 | 0.01 | 0.035 | 0.005 | 0.01 | 0.018 | 0.018 |
| GOOBS0606D2-RC7□-105R143-M | | | | | 0.014 | 0.045 | 0.007 | 0.014 | Travel Distance：±0.05/300 | |
| GOOBS0606D2-RC5□-130R168-M | 95 | 130 | 140 | 168 | 0.01 | 0.035 | 0.005 | 0.01 | 0.02 | 0.018 |
| GOOBS0606D2-RC7□-130R168-M | | | | | 0.014 | 0.045 | 0.007 | 0.014 | Travel Distance：±0.05/300 | |

# GOOBS0606-M Machining-less to the end shaft

| Rolled Ball Screw | | | | |
|---|---|---|---|---|
| Nominal Dia(mm) | 6 | | | |
| Ball Dia(mm) | 1.2 | | | |
| Lead(mm) | 6 | | | |
| B.C.D(mm) | 6.3 | | | |
| Thread Direction | Right Hand | | | |
| Circuits | 1.7 Returns x 2 Circuits | | | |
| Accuracy | C5X | C5Y | C7Y | C7Z |
| Axial Backlash | 0 | < 0.005 | < 0.005 | < 0.01 |
| Dynamic Load Ca(N) | 1380 | | | |
| Max. Static Load Coa(N) | 1900 | | | |

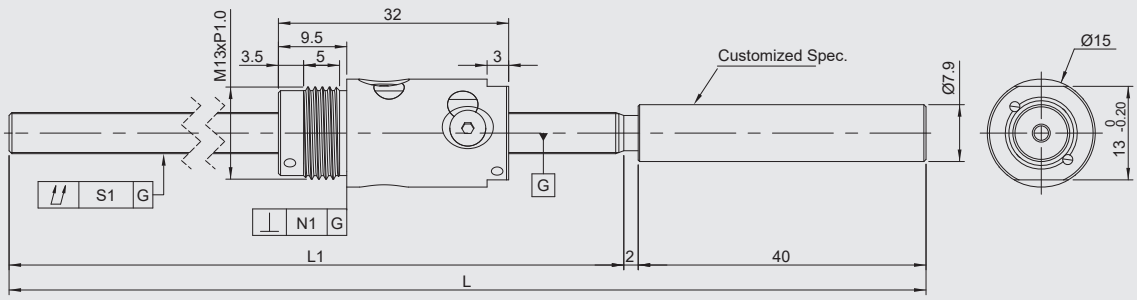


| Specification | Stroke | Shaft Length | | Cumulative Deviation Tolerance | Nut Verticality Tolerance | Lead Accuracy | |
|---|---|---|---|---|---|---|---|
| | | L1 | L | S1 | N1 | Mean Travel | Variation |
| GOOBS0606D2-RC5□-75R117-M | 40 | 75 | 117 | 0.035 | 0.01 | 0.018 | 0.018 |
| GOOBS0606D2-RC7□-75R117-M | | | | 0.045 | 0.014 | Travel Distance：±0.05/300 | |
| GOOBS0606D2-RC5□-105R147-M | 70 | 105 | 147 | 0.035 | 0.01 | 0.018 | 0.018 |
| GOOBS0606D2-RC7□-105R147-M | | | | 0.045 | 0.014 | Travel Distance：±0.05/300 | |
| GOOBS0606D2-RC5□-130R172-M | 95 | 130 | 172 | 0.035 | 0.01 | 0.02 | 0.018 |
| GOOBS0606D2-RC7□-130R172-M | | | | 0.045 | 0.014 | Travel Distance：±0.05/300 | |

# GOOBS0801-F

| Rolled Ball Screw | | | | |
|---|---|---|---|---|
| Nominal Dia(mm) | 8 | | | |
| Ball Dia(mm) | 0.8 | | | |
| Lead(mm) | 1 | | | |
| B.C.D(mm) | 8.2 | | | |
| Thread Direction | Right Hand | | | |
| Circuits | 1 Return x 3 Circuits | | | |
| Accuracy | C5X | C5Y | C7Y | C7Z |
| Axial Backlash | 0 | < 0.005 | < 0.005 | < 0.01 |
| Dynamic Load Ca(N) | 700 | | | |
| Max. Static Load Coa(N) | 1420 | | | |

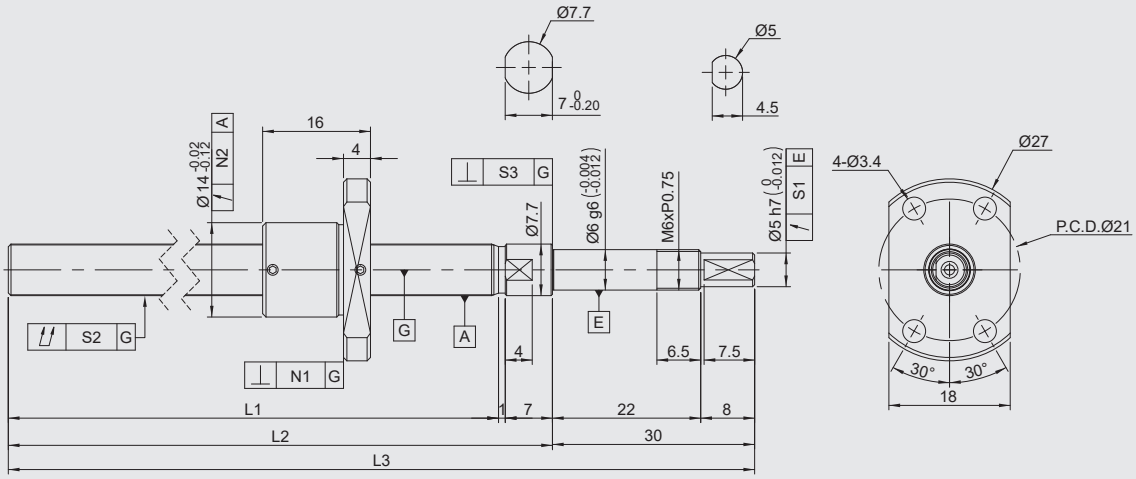


| Specification | Stroke | Shaft Length | | | Deviation Tolerance | Cumulative Deviation Tolerance | Bearing Seat Verticality Tolerance | Flanged Nut Verticality | Nut Deviation Tolerance | Lead Accuracy | |
|---|---|---|---|---|---|---|---|---|---|---|---|
| | | L1 | L2 | L3 | S1 | S2 | S3 | N1 | N2 | Mean Travel | Variation |
| GOOBS0801KS-RC5□-65R103-F | 40 | 65 | 73 | 103 | 0.01 | 0.035 | 0.005 | 0.01 | 0.012 | 0.018 | 0.018 |
| GOOBS0801KS-RC7□-65R103-F | | | | | 0.014 | 0.045 | 0.007 | 0.014 | 0.02 | Travel Distance:±0.05/300 | |
| GOOBS0801KS-RC5□-95R133-F | 70 | 95 | 103 | 133 | 0.01 | 0.035 | 0.005 | 0.01 | 0.012 | 0.018 | 0.018 |
| GOOBS0801KS-RC7□-95R133-F | | | | | 0.014 | 0.045 | 0.007 | 0.014 | 0.02 | Travel Distance:±0.05/300 | |
| GOOBS0801KS-RC5□-125R163-F | 100 | 125 | 133 | 163 | 0.01 | 0.035 | 0.005 | 0.01 | 0.012 | 0.02 | 0.018 |
| GOOBS0801KS-RC7□-125R163-F | | | | | 0.014 | 0.045 | 0.007 | 0.014 | 0.02 | Travel Distance:±0.05/300 | |

# GOOBS0801-F Machining-less to the end shaft

| Rolled Ball Screw | | | | |
|---|---|---|---|---|
| Nominal Dia(mm) | 8 | | | |
| Ball Dia(mm) | 0.8 | | | |
| Lead(mm) | 1 | | | |
| B.C.D(mm) | 8.2 | | | |
| Thread Direction | Right Hand | | | |
| Circuits | 1 Return x 3 Circuits | | | |
| Accuracy | C5X | C5Y | C7Y | C7Z |
| Axial Backlash | 0 | < 0.005 | < 0.005 | < 0.01 |
| Dynamic Load Ca(N) | 700 | | | |
| Max. Static Load Coa(N) | 1420 | | | |

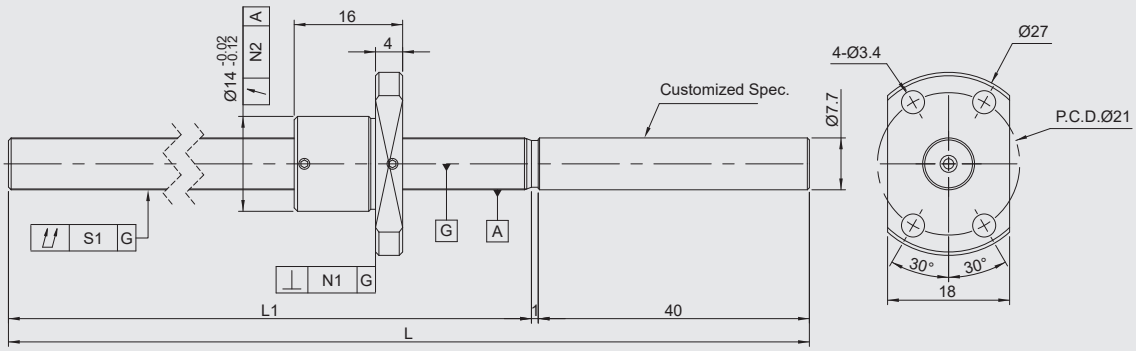


| Specification | Stroke | Shaft Length | | Cumulative Deviation Tolerance | Flanged Nut Verticality | Nut Deviation Tolerance | Lead Accuracy | |
|---|---|---|---|---|---|---|---|---|
| | | L1 | L | S1 | N1 | N2 | Mean Travel | Variation |
| GOOBS0801KS-RC5□-65R106-F | 40 | 65 | 106 | 0.035 | 0.01 | 0.012 | 0.018 | 0.018 |
| GOOBS0801KS-RC7□-65R106-F | | | | 0.045 | 0.014 | 0.02 | Travel Distance：±0.05/300 | |
| GOOBS0801KS-RC5□-95R136-F | 70 | 95 | 136 | 0.035 | 0.01 | 0.012 | 0.018 | 0.018 |
| GOOBS0801KS-RC7□-95R136-F | | | | 0.045 | 0.014 | 0.02 | Travel Distance：±0.05/300 | |
| GOOBS0801KS-RC5□-125R166-F | 100 | 125 | 166 | 0.035 | 0.01 | 0.012 | 0.02 | 0.018 |
| GOOBS0801KS-RC7□-125R166-F | | | | 0.045 | 0.014 | 0.02 | Travel Distance：±0.05/300 | |

# GOOBS0801-H

| Rolled Ball Screw | | | | |
|---|---|---|---|---|
| Nominal Dia(mm) | 8 | | | |
| Ball Dia(mm) | 0.8 | | | |
| Lead(mm) | 1 | | | |
| B.C.D(mm) | 8.2 | | | |
| Thread Direction | Right Hand | | | |
| Circuits | 1 Return x 3 Circuits | | | |
| Accuracy | C5X | C5Y | C7Y | C7Z |
| Axial Backlash | 0 | < 0.005 | < 0.005 | < 0.01 |
| Dynamic Load Ca(N) | 700 | | | |
| Max. Static Load Coa(N) | 1420 | | | |

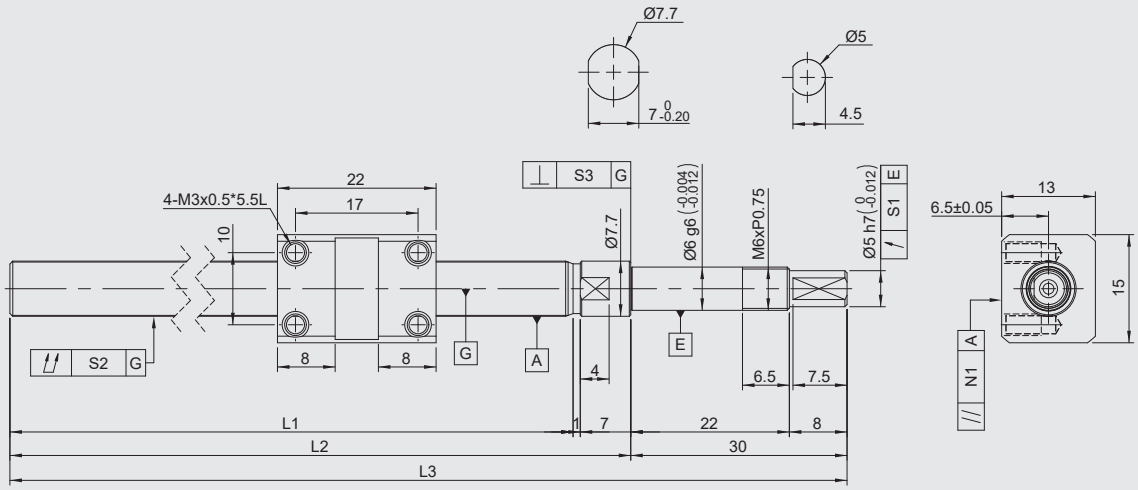


| Specification | Stroke | Shaft Length | | | Deviation Tolerance | Cumulative Deviation Tolerance | Bearing Seat Verticality Tolerance | Nut Parallelism Tolerance | Lead Accuracy | |
|---|---|---|---|---|---|---|---|---|---|---|
| | | L1 | L2 | L3 | S1 | S2 | S3 | N1 | Mean Travel | Variation |
| GOOBS0801KS-RC5□-65R103-H | 40 | 65 | 73 | 103 | 0.01 | 0.035 | 0.005 | 0.01 | 0.018 | 0.018 |
| GOOBS0801KS-RC7□-65R103-H | | | | | 0.014 | 0.045 | 0.007 | 0.017 | Travel Distance:±0.05/300 | |
| GOOBS0801KS-RC5□-95R133-H | 70 | 95 | 103 | 133 | 0.01 | 0.035 | 0.005 | 0.01 | 0.018 | 0.018 |
| GOOBS0801KS-RC7□-95R133-H | | | | | 0.014 | 0.045 | 0.007 | 0.017 | Travel Distance:±0.05/300 | |
| GOOBS0801KS-RC5□-125R163-H | 100 | 125 | 133 | 163 | 0.01 | 0.035 | 0.005 | 0.01 | 0.02 | 0.018 |
| GOOBS0801KS-RC7□-125R163-H | | | | | 0.014 | 0.045 | 0.007 | 0.017 | Travel Distance:±0.05/300 | |

# GOOBS0801-H Machining-less to the end shaft

| Rolled Ball Screw | | | | |
|---|---|---|---|---|
| Nominal Dia(mm) | 8 | | | |
| Ball Dia(mm) | 0.8 | | | |
| Lead(mm) | 1 | | | |
| B.C.D(mm) | 8.2 | | | |
| Thread Direction | Right Hand | | | |
| Circuits | 1 Return x 3 Circuits | | | |
| Accuracy | C5X | C5Y | C7Y | C7Z |
| Axial Backlash | 0 | < 0.005 | < 0.005 | < 0.01 |
| Dynamic Load Ca(N) | 700 | | | |
| Max. Static Load Coa(N) | 1420 | | | |

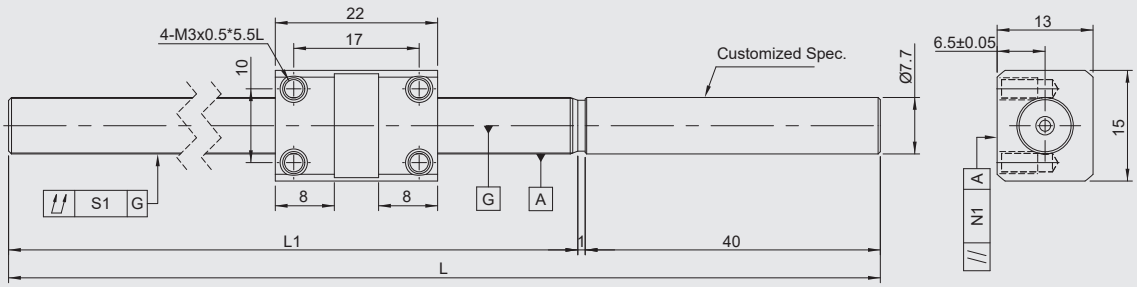


| Specification | Stroke | Shaft Length | | Cumulative Deviation Tolerance | Nut Parallelism Tolerance | Lead Accuracy | |
|---|---|---|---|---|---|---|---|
| | | L1 | L | S1 | N1 | Mean Travel | Variation |
| GOOBS0801KS-RC5□-65R106-H | 40 | 65 | 106 | 0.035 | 0.01 | 0.018 | 0.018 |
| GOOBS0801KS-RC7□-65R106-H | | | | 0.045 | 0.017 | Travel Distance：±0.05/300 | |
| GOOBS0801KS-RC5□-95R136-H | 70 | 95 | 136 | 0.035 | 0.01 | 0.018 | 0.018 |
| GOOBS0801KS-RC7□-95R136-H | | | | 0.045 | 0.017 | Travel Distance：±0.05/300 | |
| GOOBS0801KS-RC5□-125R166-H | 100 | 125 | 166 | 0.035 | 0.01 | 0.02 | 0.018 |
| GOOBS0801KS-RC7□-125R166-H | | | | 0.045 | 0.017 | Travel Distance：±0.05/300 | |

# GOOBS0801-M

| Rolled Ball Screw | | | | |
|---|---|---|---|---|
| Nominal Dia(mm) | 8 | | | |
| Ball Dia(mm) | 0.8 | | | |
| Lead(mm) | 1 | | | |
| B.C.D(mm) | 8.2 | | | |
| Thread Direction | Right Hand | | | |
| Circuits | 1 Return x 3 Circuits | | | |
| Accuracy | C5X | C5Y | C7Y | C7Z |
| Axial Backlash | 0 | < 0.005 | < 0.005 | < 0.01 |
| Dynamic Load Ca(N) | 700 | | | |
| Max. Static Load Coa(N) | 1420 | | | |

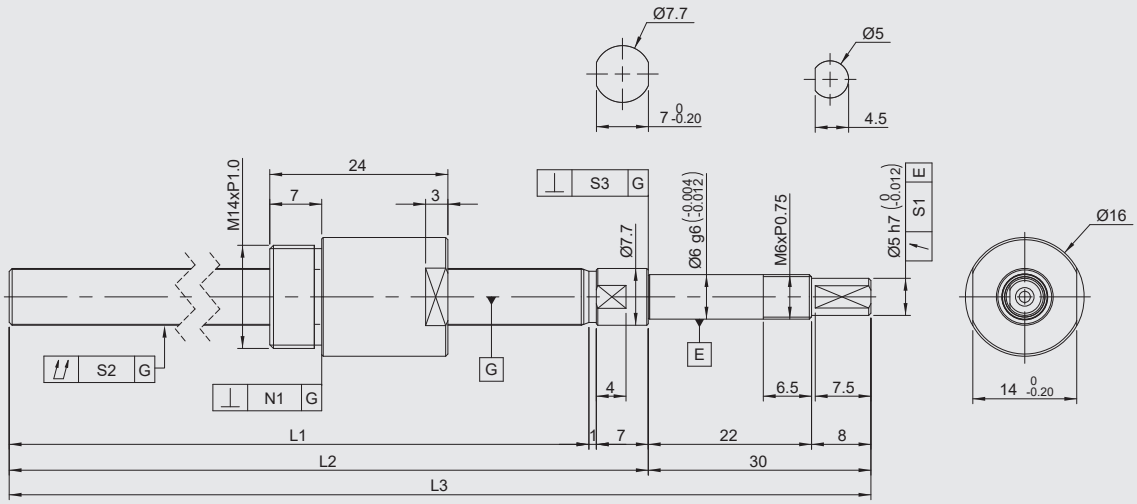


| Specification | Stroke | Shaft Length | | | Deviation Tolerance | Cumulative Deviation Tolerance | Bearing Seat Verticality Tolerance | Nut Verticality Tolerance | Lead Accuracy | |
|---|---|---|---|---|---|---|---|---|---|---|
| | | L1 | L2 | L3 | S1 | S2 | S3 | N1 | Mean Travel | Variation |
| GOOBS0801KS-RC5□-65R103-M | 40 | 65 | 73 | 103 | 0.01 | 0.035 | 0.005 | 0.01 | 0.018 | 0.018 |
| GOOBS0801KS-RC7□-65R103-M | | | | | 0.014 | 0.045 | 0.007 | 0.014 | Travel Distance：±0.05/300 | |
| GOOBS0801KS-RC5□-95R133-M | 70 | 95 | 103 | 133 | 0.01 | 0.035 | 0.005 | 0.01 | 0.018 | 0.018 |
| GOOBS0801KS-RC7□-95R133-M | | | | | 0.014 | 0.045 | 0.007 | 0.014 | Travel Distance：±0.05/300 | |
| GOOBS0801KS-RC5□-125R163-M | 100 | 125 | 133 | 163 | 0.01 | 0.035 | 0.005 | 0.01 | 0.02 | 0.018 |
| GOOBS0801KS-RC7□-125R163-M | | | | | 0.014 | 0.045 | 0.007 | 0.014 | Travel Distance：±0.05/300 | |

# GOOBS0801-M Machining-less to the end shaft

| Rolled Ball Screw | | | | |
|---|---|---|---|---|
| Nominal Dia(mm) | 8 | | | |
| Ball Dia(mm) | 0.8 | | | |
| Lead(mm) | 1 | | | |
| B.C.D(mm) | 8.2 | | | |
| Thread Direction | Right Hand | | | |
| Circuits | 1 Return x 3 Circuits | | | |
| Accuracy | C5X | C5Y | C7Y | C7Z |
| Axial Backlash | 0 | < 0.005 | < 0.005 | < 0.01 |
| Dynamic Load Ca(N) | 700 | | | |
| Max. Static Load Coa(N) | 1420 | | | |

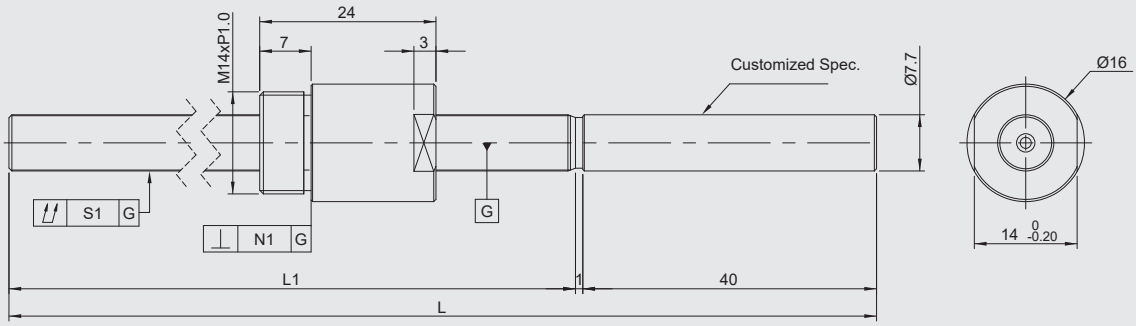


| Specification | Stroke | Shaft Length | | Cumulative Deviation Tolerance | Nut Verticality Tolerance | Lead Accuracy | |
|---|---|---|---|---|---|---|---|
| | | L1 | L | S1 | N1 | Mean Travel | Variation |
| GOOBS0801KS-RC5□-65R106-M | 40 | 65 | 106 | 0.035 | 0.01 | 0.018 | 0.018 |
| GOOBS0801KS-RC7□-65R106-M | | | | 0.045 | 0.014 | Travel Distance：±0.05/300 | |
| GOOBS0801KS-RC5□-95R136-M | 70 | 95 | 136 | 0.035 | 0.01 | 0.018 | 0.018 |
| GOOBS0801KS-RC7□-95R136-M | | | | 0.045 | 0.014 | Travel Distance：±0.05/300 | |
| GOOBS0801KS-RC5□-125R166-M | 100 | 125 | 166 | 0.035 | 0.01 | 0.02 | 0.018 |
| GOOBS0801KS-RC7□-125R166-M | | | | 0.045 | 0.014 | Travel Distance：±0.05/300 | |

# GOOBS0802-F

| Rolled Ball Screw | | | | |
|---|---|---|---|---|
| Nominal Dia(mm) | 8 | | | |
| Ball Dia(mm) | 1.2 | | | |
| Lead(mm) | 2 | | | |
| B.C.D(mm) | 8.3 | | | |
| Thread Direction | Right Hand | | | |
| Circuits | 1 Return x 3 Circuits | | | |
| Accuracy | C5X | C5Y | C7Y | C7Z |
| Axial Backlash | 0 | < 0.005 | < 0.005 | < 0.01 |
| Dynamic Load Ca(N) | 1700 | | | |
| Max. Static Load Coa(N) | 3200 | | | |

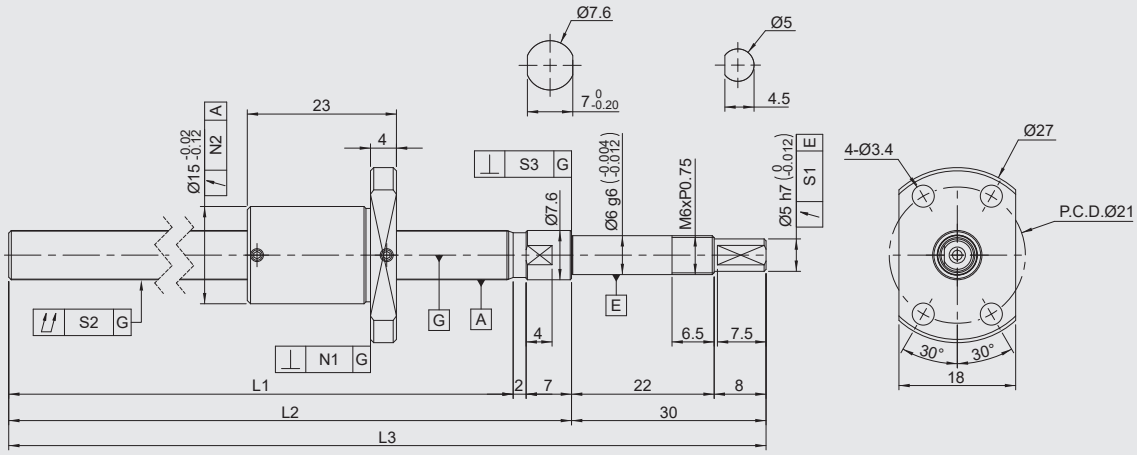


| Specification | Stroke | Shaft Length | | | Deviation Tolerance | Cumulative Deviation Tolerance | Bearing Seat Verticality Tolerance | Flanged Nut Verticality | Nut Deviation Tolerance | Lead Accuracy | |
|---|---|---|---|---|---|---|---|---|---|---|---|
| | | L1 | L2 | L3 | S1 | S2 | S3 | N1 | N2 | Mean Travel | Variation |
| GOOBS0802KS-RC5□-65R104-F | 40 | 65 | 74 | 104 | 0.01 | 0.035 | 0.005 | 0.01 | 0.012 | 0.018 | 0.018 |
| GOOBS0802KS-RC7□-65R104-F | | | | | 0.014 | 0.045 | 0.007 | 0.014 | 0.02 | Travel Distance：±0.05/300 | |
| GOOBS0802KS-RC5□-95R134-F | 70 | 95 | 104 | 134 | 0.01 | 0.035 | 0.005 | 0.01 | 0.012 | 0.018 | 0.018 |
| GOOBS0802KS-RC7□-95R134-F | | | | | 0.014 | 0.045 | 0.007 | 0.014 | 0.02 | Travel Distance：±0.05/300 | |
| GOOBS0802KS-RC5□-125R164-F | 100 | 125 | 134 | 164 | 0.01 | 0.035 | 0.005 | 0.01 | 0.012 | 0.02 | 0.018 |
| GOOBS0802KS-RC7□-125R164-F | | | | | 0.014 | 0.045 | 0.007 | 0.014 | 0.02 | Travel Distance：±0.05/300 | |

# GOOBS0802-F Machining-less to the end shaft

| Rolled Ball Screw | | | | |
|---|---|---|---|---|
| Nominal Dia(mm) | 8 | | | |
| Ball Dia(mm) | 1.2 | | | |
| Lead(mm) | 2 | | | |
| B.C.D(mm) | 8.3 | | | |
| Thread Direction | Right Hand | | | |
| Circuits | 1 Return x 3 Circuits | | | |
| Accuracy | C5X | C5Y | C7Y | C7Z |
| Axial Backlash | 0 | < 0.005 | < 0.005 | < 0.01 |
| Dynamic Load Ca(N) | 1700 | | | |
| Max. Static Load Coa(N) | 3200 | | | |

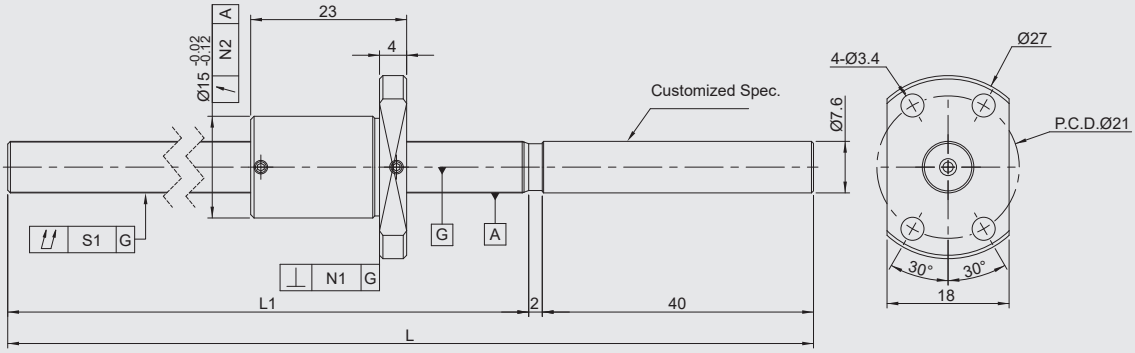


| Specification | Stroke | Shaft Length | | Cumulative Deviation Tolerance | Flanged Nut Verticality | Nut Deviation Tolerance | Lead Accuracy | |
|---|---|---|---|---|---|---|---|---|
| | | L1 | L | S1 | N1 | N2 | Mean Travel | Variation |
| GOOBS0802KS-RC5□-65R107-F | 40 | 65 | 107 | 0.035 | 0.01 | 0.012 | 0.018 | 0.018 |
| GOOBS0802KS-RC7□-65R107-F | | | | 0.045 | 0.014 | 0.02 | Travel Distance：±0.05/300 | |
| GOOBS0802KS-RC5□-95R137-F | 70 | 95 | 137 | 0.035 | 0.01 | 0.012 | 0.018 | 0.018 |
| GOOBS0802KS-RC7□-95R137-F | | | | 0.045 | 0.014 | 0.02 | Travel Distance：±0.05/300 | |
| GOOBS0802KS-RC5□-125R167-F | 100 | 125 | 167 | 0.035 | 0.01 | 0.012 | 0.02 | 0.018 |
| GOOBS0802KS-RC7□-125R167-F | | | | 0.045 | 0.014 | 0.02 | Travel Distance：±0.05/300 | |

# GOOBS0802-H

| Rolled Ball Screw | | | | |
|---|---|---|---|---|
| Nominal Dia(mm) | 8 | | | |
| Ball Dia(mm) | 1.2 | | | |
| Lead(mm) | 2 | | | |
| B.C.D(mm) | 8.3 | | | |
| Thread Direction | Right Hand | | | |
| Circuits | 1 Return x 3 Circuits | | | |
| Accuracy | C5X | C5Y | C7Y | C7Z |
| Axial Backlash | 0 | < 0.005 | < 0.005 | < 0.01 |
| Dynamic Load Ca(N) | 1700 | | | |
| Max. Static Load Coa(N) | 3200 | | | |

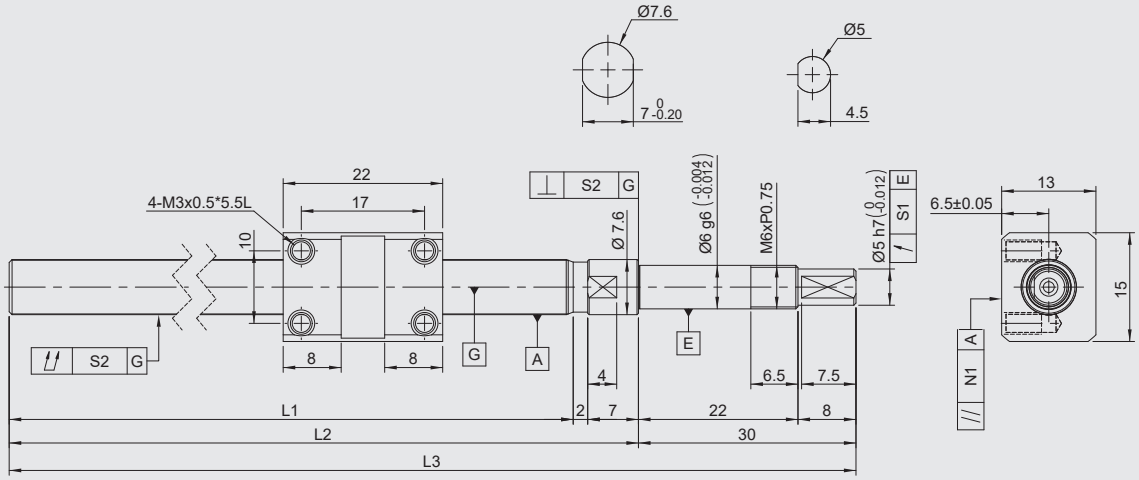


| Specification | Stroke | Shaft Length | | | Deviation Tolerance | Cumulative Deviation Tolerance | Bearing Seat Verticality Tolerance | Nut Parallelism Tolerance | Lead Accuracy | |
|---|---|---|---|---|---|---|---|---|---|---|
| | | L1 | L2 | L3 | S1 | S2 | S3 | N1 | Mean Travel | Variation |
| GOOBS0802KS-RC5□-65R104-H | 40 | 65 | 74 | 104 | 0.01 | 0.035 | 0.005 | 0.01 | 0.018 | 0.018 |
| GOOBS0802KS-RC7□-65R104-H | | | | | 0.014 | 0.045 | 0.007 | 0.017 | Travel Distance：±0.05/300 | |
| GOOBS0802KS-RC5□-95R134-H | 70 | 95 | 104 | 134 | 0.01 | 0.035 | 0.005 | 0.01 | 0.018 | 0.018 |
| GOOBS0802KS-RC7□-95R134-H | | | | | 0.014 | 0.045 | 0.007 | 0.017 | Travel Distance：±0.05/300 | |
| GOOBS0802KS-RC5□-125R164-H | 100 | 125 | 134 | 164 | 0.01 | 0.035 | 0.005 | 0.01 | 0.02 | 0.018 |
| GOOBS0802KS-RC7□-125R164-H | | | | | 0.014 | 0.045 | 0.007 | 0.017 | Travel Distance：±0.05/300 | |

# GOOBS0802-H Machining-less to the end shaft

| Rolled Ball Screw | | | | |
|---|---|---|---|---|
| Nominal Dia(mm) | 8 | | | |
| Ball Dia(mm) | 1.2 | | | |
| Lead(mm) | 2 | | | |
| B.C.D(mm) | 8.3 | | | |
| Thread Direction | Right Hand | | | |
| Circuits | 1 Return x 3 Circuits | | | |
| Accuracy | C5X | C5Y | C7Y | C7Z |
| Axial Backlash | 0 | < 0.005 | < 0.005 | < 0.01 |
| Dynamic Load Ca(N) | 1700 | | | |
| Max. Static Load Coa(N) | 3200 | | | |

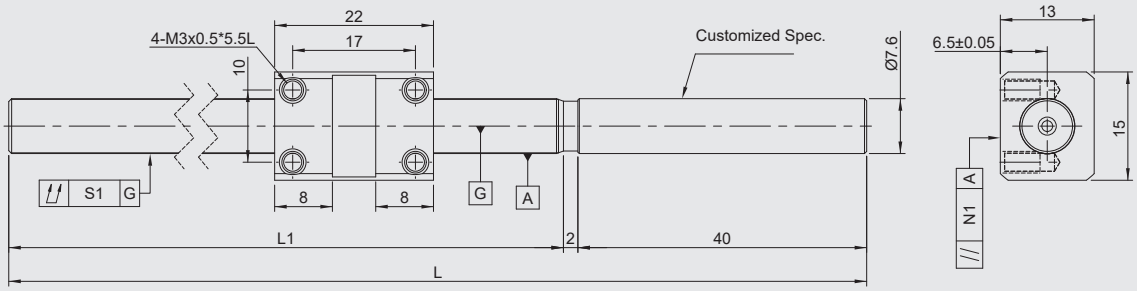


| Specification | Stroke | Shaft Length | | Cumulative Deviation Tolerance | Nut Parallelism Tolerance | Lead Accuracy | |
|---|---|---|---|---|---|---|---|
| | | L1 | L | S1 | N1 | Mean Travel | Variation |
| GOOBS0802KS-RC5□-65R107-H | 40 | 65 | 107 | 0.035 | 0.01 | 0.018 | 0.018 |
| GOOBS0802KS-RC7□-65R107-H | | | | 0.045 | 0.017 | Travel Distance：±0.05/300 | |
| GOOBS0802KS-RC5□-95R137-H | 70 | 95 | 137 | 0.035 | 0.01 | 0.018 | 0.018 |
| GOOBS0802KS-RC7□-95R137-H | | | | 0.045 | 0.017 | Travel Distance：±0.05/300 | |
| GOOBS0802KS-RC5□-125R167-H | 100 | 125 | 167 | 0.035 | 0.01 | 0.02 | 0.018 |
| GOOBS0802KS-RC7□-125R167-H | | | | 0.045 | 0.017 | Travel Distance：±0.05/300 | |

# GOOBS0802-M

| Rolled Ball Screw | | | | |
|---|---|---|---|---|
| Nominal Dia(mm) | 8 | | | |
| Ball Dia(mm) | 1.2 | | | |
| Lead(mm) | 2 | | | |
| B.C.D(mm) | 8.3 | | | |
| Thread Direction | Right Hand | | | |
| Circuits | 1 Return x 3 Circuits | | | |
| Accuracy | C5X | C5Y | C7Y | C7Z |
| Axial Backlash | 0 | < 0.005 | < 0.005 | < 0.01 |
| Dynamic Load Ca(N) | 1700 | | | |
| Max. Static Load Coa(N) | 3200 | | | |

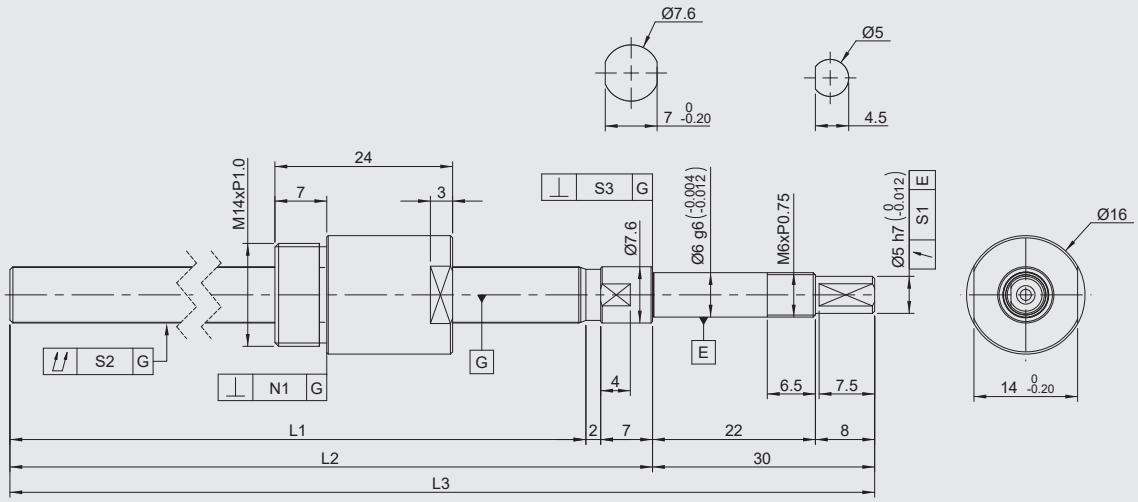


| Specification | Stroke | Shaft Length | | | Deviation Tolerance | Cumulative Deviation Tolerance | Bearing Seat Verticality Tolerance | Nut Verticality Tolerance | Lead Accuracy | |
|---|---|---|---|---|---|---|---|---|---|---|
| | | L1 | L2 | L3 | S1 | S2 | S3 | N1 | Mean Travel | Variation |
| GOOBS0802KS-RC5□-65R104-M | 40 | 65 | 74 | 104 | 0.01 | 0.035 | 0.005 | 0.01 | 0.018 | 0.018 |
| GOOBS0802KS-RC7□-65R104-M | | | | | 0.014 | 0.045 | 0.007 | 0.014 | Travel Distance：±0.05/300 | |
| GOOBS0802KS-RC5□-95R134-M | 70 | 95 | 104 | 134 | 0.01 | 0.035 | 0.005 | 0.01 | 0.018 | 0.018 |
| GOOBS0802KS-RC7□-95R134-M | | | | | 0.014 | 0.045 | 0.007 | 0.014 | Travel Distance：±0.05/300 | |
| GOOBS0802KS-RC5□-125R164-M | 100 | 125 | 134 | 164 | 0.01 | 0.035 | 0.005 | 0.01 | 0.02 | 0.018 |
| GOOBS0802KS-RC7□-125R164-M | | | | | 0.014 | 0.045 | 0.007 | 0.014 | Travel Distance：±0.05/300 | |

# GOOBS0802-M Machining-less to the end shaft

| Rolled Ball Screw | | | | |
|---|---|---|---|---|
| Nominal Dia(mm) | 8 | | | |
| Ball Dia(mm) | 1.2 | | | |
| Lead(mm) | 2 | | | |
| B.C.D(mm) | 8.3 | | | |
| Thread Direction | Right Hand | | | |
| Circuits | 1 Return x 3 Circuits | | | |
| Accuracy | C5X | C5Y | C7Y | C7Z |
| Axial Backlash | 0 | < 0.005 | < 0.005 | < 0.01 |
| Dynamic Load Ca(N) | 1700 | | | |
| Max. Static Load Coa(N) | 3200 | | | |

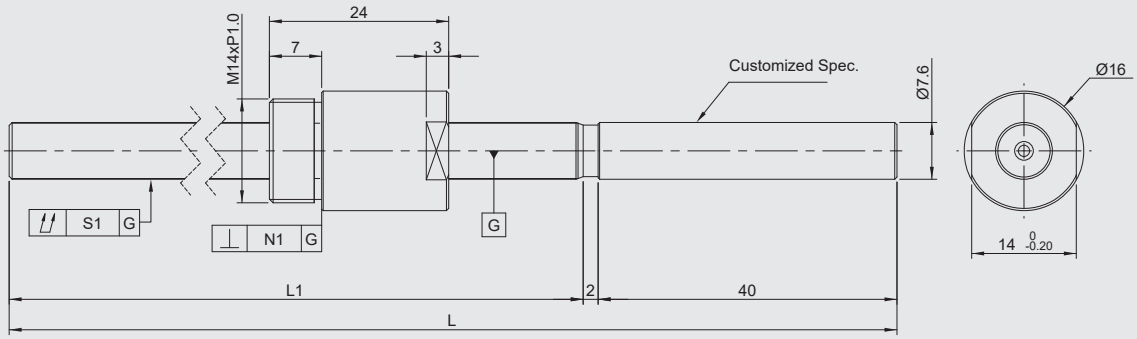


| Specification | Stroke | Shaft Length | | Cumulative Deviation Tolerance | Nut Verticality Tolerance | Lead Accuracy | |
|---|---|---|---|---|---|---|---|
| | | L1 | L | S1 | N1 | Mean Travel | Variation |
| GOOBS0802KS-RC5□-65R107-M | 40 | 65 | 107 | 0.035 | 0.01 | 0.018 | 0.018 |
| GOOBS0802KS-RC7□-65R107-M | | | | 0.045 | 0.014 | Travel Distance：±0.05/300 | |
| GOOBS0802KS-RC5□-95R137-M | 70 | 95 | 137 | 0.035 | 0.01 | 0.018 | 0.018 |
| GOOBS0802KS-RC7□-95R137-M | | | | 0.045 | 0.014 | Travel Distance：±0.05/300 | |
| GOOBS0802KS-RC5□-125R167-M | 100 | 125 | 167 | 0.035 | 0.01 | 0.02 | 0.018 |
| GOOBS0802KS-RC7□-125R167-M | | | | 0.045 | 0.014 | Travel Distance：±0.05/300 | |

# GOOBS0805-F

| Rolled Ball Screw | | | | |
|---|---|---|---|---|
| Nominal Dia(mm) | 8 | | | |
| Ball Dia(mm) | 2 | | | |
| Lead(mm) | 5 | | | |
| B.C.D(mm) | 8.3 | | | |
| Thread Direction | Right Hand | | | |
| Circuits | 2.7 Returns x 1 Circuit | | | |
| Accuracy | C5X | C5Y | C7Y | C7Z |
| Axial Backlash | 0 | < 0.005 | < 0.005 | < 0.01 |
| Dynamic Load Ca(N) | 2550 | | | |
| Max. Static Load Coa(N) | 3780 | | | |

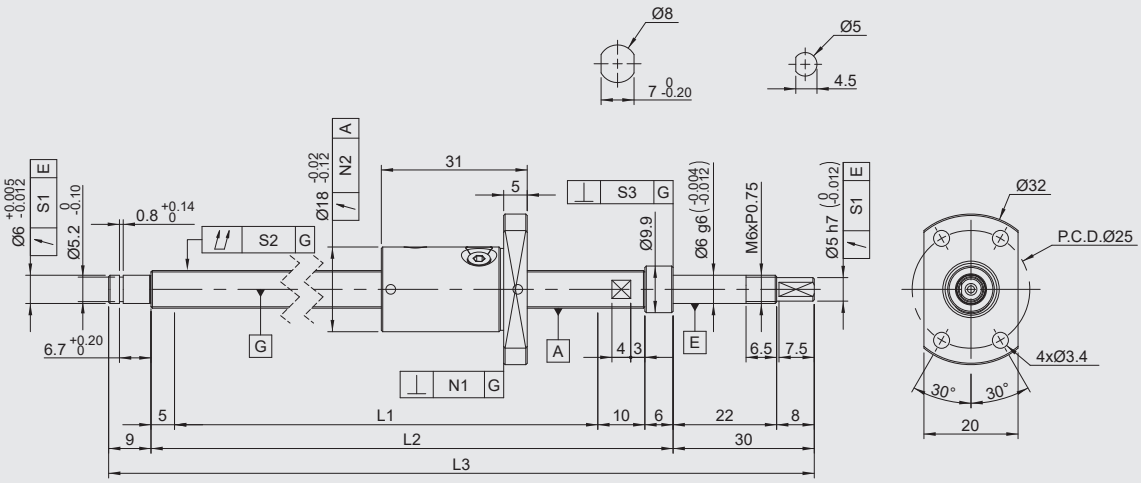


| Specification | Stroke | Shaft Length | | | Deviation Tolerance | Cumulative Deviation Tolerance | Bearing Seat Verticality Tolerance | Flanged Nut Verticality | Nut Deviation Tolerance | Lead Accuracy | |
|---|---|---|---|---|---|---|---|---|---|---|---|
| | | L1 | L2 | L3 | S1 | S2 | S3 | N1 | N2 | Mean Travel | Variation |
| GOOBS0805D3-RC5□-190R250-F | 150 | 190 | 211 | 250 | 0.01 | 0.05 | 0.005 | 0.01 | 0.012 | 0.02 | 0.018 |
| GOOBS0805D3-RC7□-190R250-F | | | | | 0.014 | 0.065 | 0.007 | 0.014 | 0.02 | Travel Distance:±0.05/300 | |
| GOOBS0805D3-RC5□-240R300-F | 200 | 240 | 261 | 300 | 0.01 | 0.065 | 0.005 | 0.01 | 0.012 | 0.023 | 0.018 |
| GOOBS0805D3-RC7□-240R300-F | | | | | 0.014 | 0.08 | 0.007 | 0.014 | 0.02 | Travel Distance:±0.05/300 | |
| GOOBS0805D3-RC5□-290R350-F | 250 | 290 | 311 | 350 | 0.01 | 0.065 | 0.005 | 0.01 | 0.012 | 0.023 | 0.018 |
| GOOBS0805D3-RC7□-290R350-F | | | | | 0.014 | 0.08 | 0.007 | 0.014 | 0.02 | Travel Distance:±0.05/300 | |

# GOOBS0805-F Machining-less to the end shaft

| Rolled Ball Screw | | | | |
|---|---|---|---|---|
| Nominal Dia(mm) | 8 | | | |
| Ball Dia(mm) | 2 | | | |
| Lead(mm) | 5 | | | |
| B.C.D(mm) | 8.3 | | | |
| Thread Direction | Right Hand | | | |
| Circuits | 2.7 Returns x 1 Circuit | | | |
| Accuracy | C5X | C5Y | C7Y | C7Z |
| Axial Backlash | 0 | < 0.005 | < 0.005 | < 0.01 |
| Dynamic Load Ca(N) | 2550 | | | |
| Max. Static Load Coa(N) | 3780 | | | |

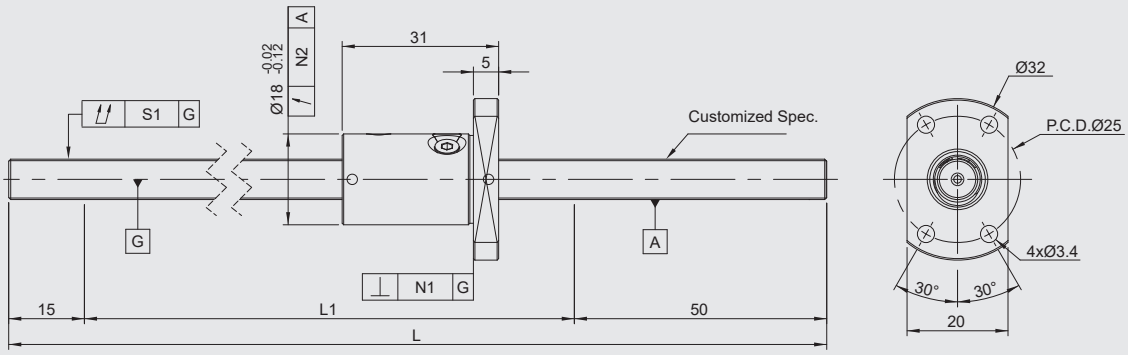


| Specification | Stroke | Shaft Length | | Cumulative Deviation Tolerance | Flanged Nut Verticality | Nut Deviation Tolerance | Lead Accuracy | |
|---|---|---|---|---|---|---|---|---|
| | | L1 | L | S1 | N1 | N2 | Mean Travel | Variation |
| GOOBS0805D3-RC5□-190R255-F | 150 | 190 | 255 | 0.05 | 0.01 | 0.012 | 0.02 | 0.018 |
| GOOBS0805D3-RC7□-190R255-F | | | | 0.065 | 0.014 | 0.02 | Travel Distance：±0.05/300 | |
| GOOBS0805D3-RC5□-240R305-F | 200 | 240 | 305 | 0.065 | 0.01 | 0.012 | 0.023 | 0.018 |
| GOOBS0805D3-RC7□-240R305-F | | | | 0.08 | 0.014 | 0.02 | Travel Distance：±0.05/300 | |
| GOOBS0805D3-RC5□-290R355-F | 250 | 290 | 355 | 0.065 | 0.01 | 0.012 | 0.023 | 0.018 |
| GOOBS0805D3-RC7□-290R355-F | | | | 0.08 | 0.014 | 0.02 | Travel Distance：±0.05/300 | |

# GOOBS0805-M

| Rolled Ball Screw | | | | |
|---|---|---|---|---|
| Nominal Dia(mm) | 8 | | | |
| Ball Dia(mm) | 2 | | | |
| Lead(mm) | 5 | | | |
| B.C.D(mm) | 8.3 | | | |
| Thread Direction | Right Hand | | | |
| Circuits | 2.7 Returns x 1 Circuit | | | |
| Accuracy | C5X | C5Y | C7Y | C7Z |
| Axial Backlash | 0 | < 0.005 | < 0.005 | < 0.01 |
| Dynamic Load Ca(N) | 2550 | | | |
| Max. Static Load Coa(N) | 3780 | | | |

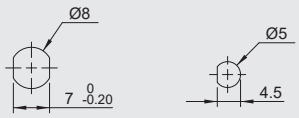


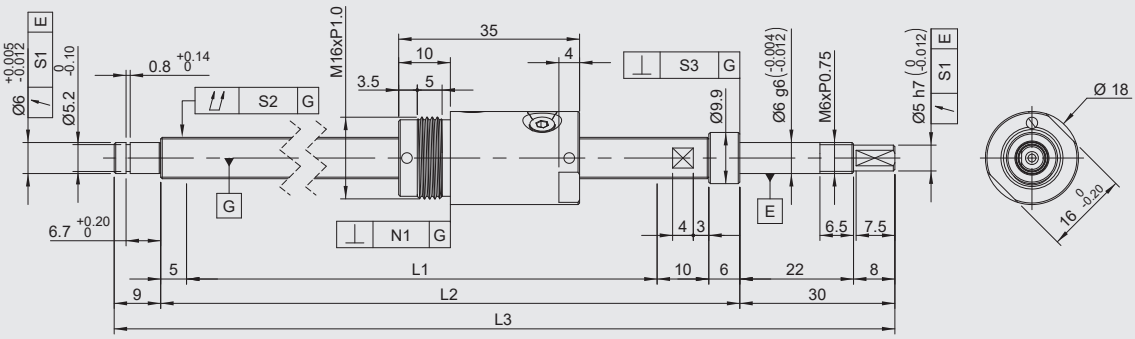


| Specification | Stroke | Shaft Length | | | Deviation Tolerance | Cumulative Deviation Tolerance | Bearing Seat Verticality Tolerance | Nut Verticality Tolerance | Lead Accuracy | |
|---|---|---|---|---|---|---|---|---|---|---|
| | | L1 | L2 | L3 | S1 | S2 | S3 | N1 | Mean Travel | Variation |
| GOOBS0805D3-RC5□-190R250-M | 150 | 190 | 211 | 250 | 0.01 | 0.05 | 0.005 | 0.01 | 0.02 | 0.018 |
| GOOBS0805D3-RC7□-190R250-M | | | | | 0.014 | 0.065 | 0.007 | 0.014 | Travel Distance：±0.05/300 | |
| GOOBS0805D3-RC5□-240R300-M | 200 | 240 | 261 | 300 | 0.01 | 0.065 | 0.005 | 0.01 | 0.023 | 0.018 |
| GOOBS0805D3-RC7□-240R300-M | | | | | 0.014 | 0.08 | 0.007 | 0.014 | Travel Distance：±0.05/300 | |
| GOOBS0805D3-RC5□-290R350-M | 250 | 290 | 311 | 350 | 0.01 | 0.065 | 0.005 | 0.01 | 0.023 | 0.018 |
| GOOBS0805D3-RC7□-290R350-M | | | | | 0.014 | 0.08 | 0.007 | 0.014 | Travel Distance：±0.05/300 | |

# GOOBS0805-M Machining-less to the end shaft

| Rolled Ball Screw | | | | |
|---|---|---|---|---|
| Nominal Dia(mm) | 8 | | | |
| Ball Dia(mm) | 2 | | | |
| Lead(mm) | 5 | | | |
| B.C.D(mm) | 8.3 | | | |
| Thread Direction | Right Hand | | | |
| Circuits | 2.7 Returns x 1 Circuit | | | |
| Accuracy | C5X | C5Y | C7Y | C7Z |
| Axial Backlash | 0 | < 0.005 | < 0.005 | < 0.01 |
| Dynamic Load Ca(N) | 2550 | | | |
| Max. Static Load Coa(N) | 3780 | | | |

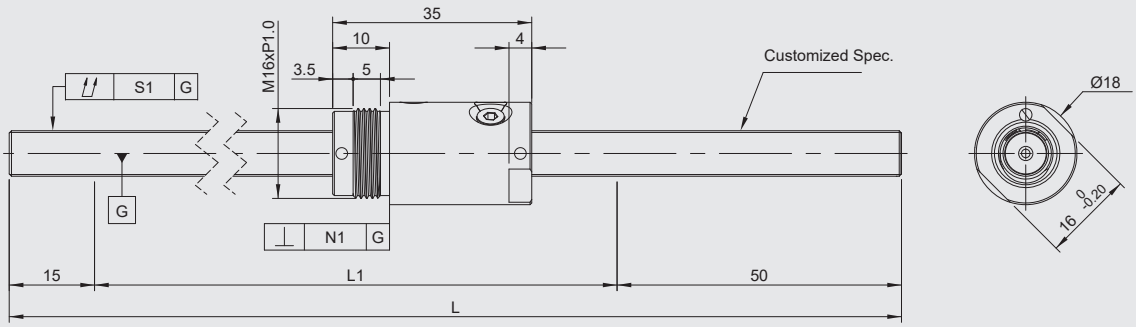


| Specification | Stroke | Shaft Length | | Cumulative Deviation Tolerance | Nut Verticality Tolerance | Lead Accuracy | |
|---|---|---|---|---|---|---|---|
| | | L1 | L | S1 | N1 | Mean Travel | Variation |
| GOOBS0805D3-RC5□-190R255-M | 150 | 190 | 255 | 0.05 | 0.01 | 0.02 | 0.018 |
| GOOBS0805D3-RC7□-190R255-M | | | | 0.065 | 0.014 | Travel Distance：±0.05/300 | |
| GOOBS0805D3-RC5□-240R305-M | 200 | 240 | 305 | 0.065 | 0.01 | 0.023 | 0.018 |
| GOOBS0805D3-RC7□-240R305-M | | | | 0.08 | 0.014 | Travel Distance：±0.05/300 | |
| GOOBS0805D3-RC5□-290R355-M | 250 | 290 | 355 | 0.065 | 0.01 | 0.023 | 0.018 |
| GOOBS0805D3-RC7□-290R355-M | | | | 0.08 | 0.014 | Travel Distance：±0.05/300 | |

# GOOBS0808-F

| Rolled Ball Screw | | | | |
|---|---|---|---|---|
| Nominal Dia(mm) | 8 | | | |
| Ball Dia(mm) | 2 | | | |
| Lead(mm) | 8 | | | |
| B.C.D(mm) | 8.3 | | | |
| Thread Direction | Right Hand | | | |
| Circuits | 1.7 Returns x 1 Circuit | | | |
| Accuracy | C5X | C5Y | C7Y | C7Z |
| Axial Backlash | 0 | < 0.005 | < 0.005 | < 0.01 |
| Dynamic Load Ca(N) | 1680 | | | |
| Max. Static Load Coa(N) | 2320 | | | |

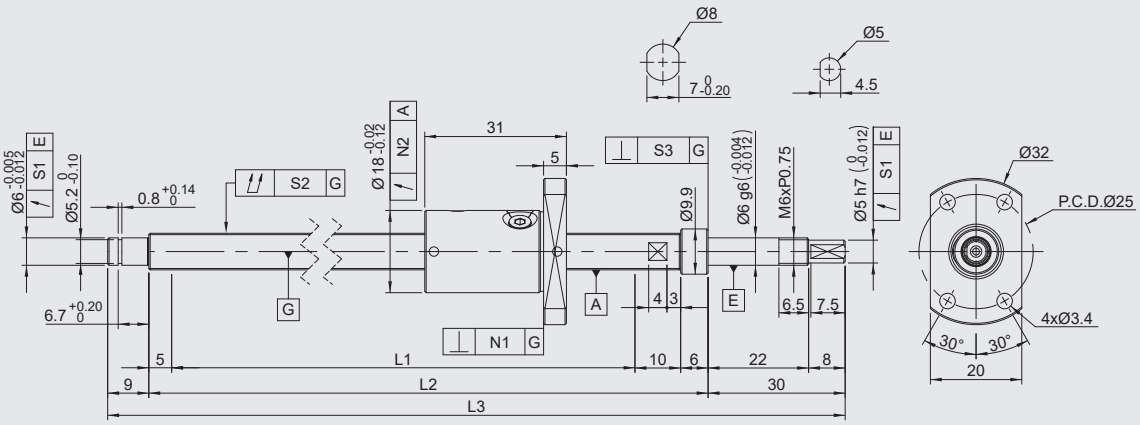


| Specification | Stroke | Shaft Length | | | Deviation Tolerance | Cumulative Deviation Tolerance | Bearing Seat Verticality Tolerance | Flanged Nut Verticality | Nut Deviation Tolerance | Lead Accuracy | |
|---|---|---|---|---|---|---|---|---|---|---|---|
| | | L1 | L2 | L3 | S1 | S2 | S3 | N1 | N2 | Mean Travel | Variation |
| GOOBS0808D1-RC5□-190R250-F | 150 | 190 | 211 | 250 | 0.01 | 0.05 | 0.005 | 0.01 | 0.012 | 0.02 | 0.018 |
| GOOBS0808D1-RC7□-190R250-F | | | | | 0.014 | 0.065 | 0.007 | 0.014 | 0.02 | Travel Distance:±0.05/300 | |
| GOOBS0808D1-RC5□-240R300-F | 200 | 240 | 261 | 300 | 0.01 | 0.065 | 0.005 | 0.01 | 0.012 | 0.023 | 0.018 |
| GOOBS0808D1-RC7□-240R300-F | | | | | 0.014 | 0.08 | 0.007 | 0.014 | 0.02 | Travel Distance:±0.05/300 | |
| GOOBS0808D1-RC5□-290R350-F | 250 | 290 | 311 | 350 | 0.01 | 0.065 | 0.005 | 0.01 | 0.012 | 0.023 | 0.018 |
| GOOBS0808D1-RC7□-290R350-F | | | | | 0.014 | 0.08 | 0.007 | 0.014 | 0.02 | Travel Distance:±0.05/300 | |

# GOOBS0808-F Machining-less to the end shaft

| Rolled Ball Screw | | | | |
|---|---|---|---|---|
| Nominal Dia(mm) | 8 | | | |
| Ball Dia(mm) | 2 | | | |
| Lead(mm) | 8 | | | |
| B.C.D(mm) | 8.3 | | | |
| Thread Direction | Right Hand | | | |
| Circuits | 1.7 Returns x 1 Circuit | | | |
| Accuracy | C5X | C5Y | C7Y | C7Z |
| Axial Backlash | 0 | < 0.005 | < 0.005 | < 0.01 |
| Dynamic Load Ca(N) | 1680 | | | |
| Max. Static Load Coa(N) | 2320 | | | |

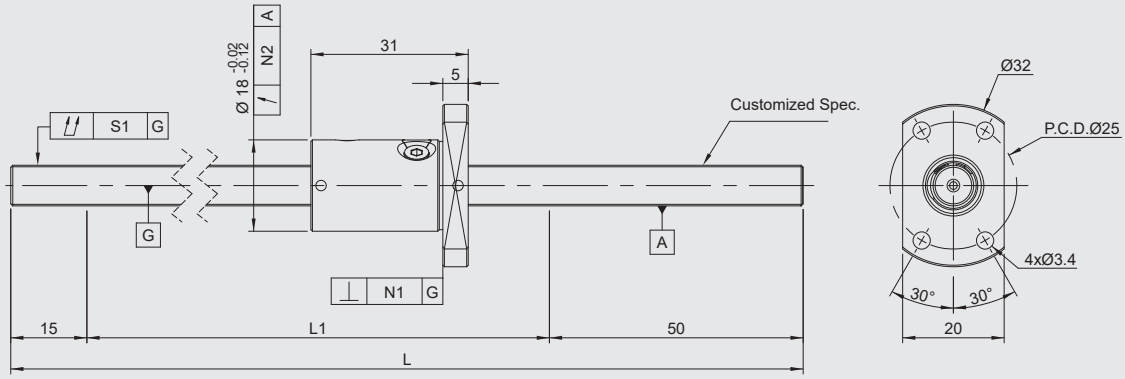


| Specification | Stroke | Shaft Length | | Cumulative Deviation Tolerance | Flanged Nut Verticality | Nut Deviation Tolerance | Lead Accuracy | |
|---|---|---|---|---|---|---|---|---|
| | | L1 | L | S1 | N1 | N2 | Mean Travel | Variation |
| GOOBS0808D1-RC5□-190R255-F | 150 | 190 | 255 | 0.05 | 0.01 | 0.012 | 0.02 | 0.018 |
| GOOBS0808D1-RC7□-190R255-F | | | | 0.065 | 0.014 | 0.02 | Travel Distance：±0.05/300 | |
| GOOBS0808D1-RC5□-240R305-F | 200 | 240 | 305 | 0.065 | 0.01 | 0.012 | 0.023 | 0.018 |
| GOOBS0808D1-RC7□-240R305-F | | | | 0.08 | 0.014 | 0.02 | Travel Distance：±0.05/300 | |
| GOOBS0808D1-RC5□-290R355-F | 250 | 290 | 355 | 0.065 | 0.01 | 0.012 | 0.023 | 0.018 |
| GOOBS0808D1-RC7□-290R355-F | | | | 0.08 | 0.014 | 0.02 | Travel Distance：±0.05/300 | |

# GOOBS0808-M

| Rolled Ball Screw | | | | |
|---|---|---|---|---|
| Nominal Dia(mm) | 8 | | | |
| Ball Dia(mm) | 2 | | | |
| Lead(mm) | 8 | | | |
| B.C.D(mm) | 8.3 | | | |
| Thread Direction | Right Hand | | | |
| Circuits | 1.7 Returns x 1 Circuit | | | |
| Accuracy | C5X | C5Y | C7Y | C7Z |
| Axial Backlash | 0 | < 0.005 | < 0.005 | < 0.01 |
| Dynamic Load Ca(N) | 1680 | | | |
| Max. Static Load Coa(N) | 2320 | | | |

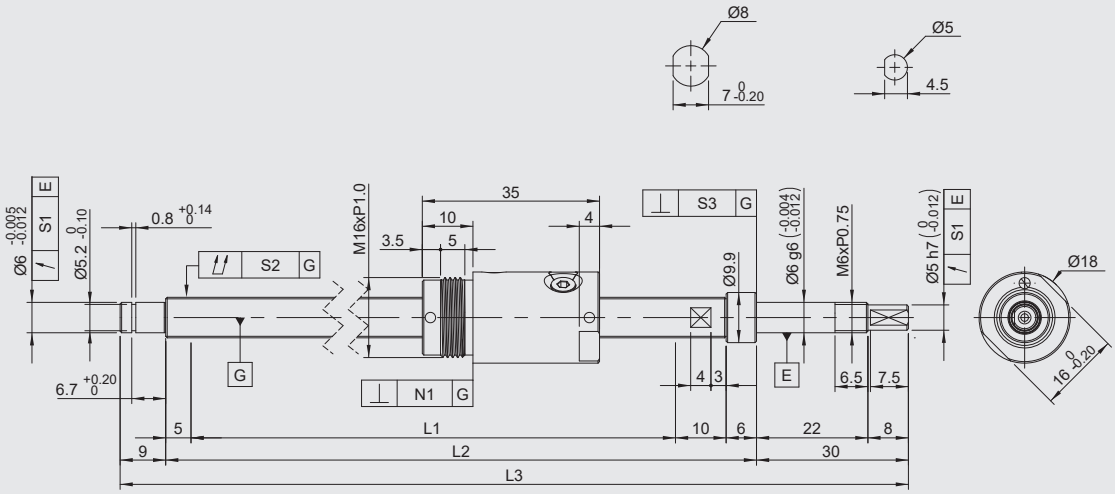


| Specification | Stroke | Shaft Length | | | Deviation Tolerance | Cumulative Deviation Tolerance | Bearing Seat Verticality Tolerance | Nut Verticality Tolerance | Lead Accuracy | |
|---|---|---|---|---|---|---|---|---|---|---|
| | | L1 | L2 | L3 | S1 | S2 | S3 | N1 | Mean Travel | Variation |
| GOOBS0808D1-RC5□-190R250-M | 150 | 190 | 211 | 250 | 0.01 | 0.05 | 0.005 | 0.01 | 0.02 | 0.018 |
| GOOBS0808D1-RC7□-190R250-M | | | | | 0.014 | 0.065 | 0.007 | 0.014 | Travel Distance：±0.05/300 | |
| GOOBS0808D1-RC5□-240R300-M | 200 | 240 | 261 | 300 | 0.01 | 0.065 | 0.005 | 0.01 | 0.023 | 0.018 |
| GOOBS0808D1-RC7□-240R300-M | | | | | 0.014 | 0.08 | 0.007 | 0.014 | Travel Distance：±0.05/300 | |
| GOOBS0808D1-RC5□-290R350-M | 250 | 290 | 311 | 350 | 0.01 | 0.065 | 0.005 | 0.01 | 0.023 | 0.018 |
| GOOBS0808D1-RC7□-290R350-M | | | | | 0.014 | 0.08 | 0.007 | 0.014 | Travel Distance：±0.05/300 | |

# GOOBS0808-M Machining-less to the end shaft

| Rolled Ball Screw | | | | |
|---|---|---|---|---|
| Nominal Dia(mm) | 8 | | | |
| Ball Dia(mm) | 2 | | | |
| Lead(mm) | 8 | | | |
| B.C.D(mm) | 8.3 | | | |
| Thread Direction | Right Hand | | | |
| Circuits | 1.7 Returns x 1 Circuit | | | |
| Accuracy | C5X | C5Y | C7Y | C7Z |
| Axial Backlash | 0 | < 0.005 | < 0.005 | < 0.01 |
| Dynamic Load Ca(N) | 1680 | | | |
| Max. Static Load Coa(N) | 2320 | | | |

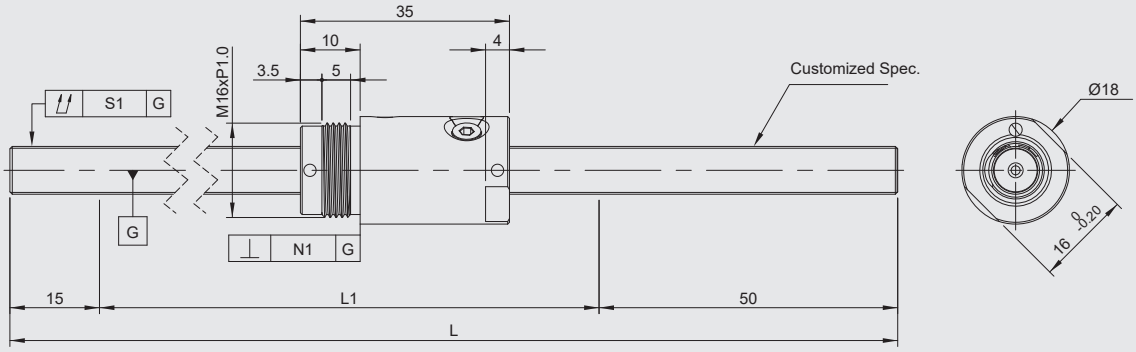


| Specification | Stroke | Shaft Length | | Cumulative Deviation Tolerance | Nut Verticality Tolerance | Lead Accuracy | |
|---|---|---|---|---|---|---|---|
| | | L1 | L | S1 | N1 | Mean Travel | Variation |
| GOOBS0808D1-RC5□-190R255-M | 150 | 190 | 255 | 0.05 | 0.01 | 0.02 | 0.018 |
| GOOBS0808D1-RC7□-190R255-M | | | | 0.065 | 0.014 | Travel Distance：±0.05/300 | |
| GOOBS0808D1-RC5□-240R305-M | 200 | 240 | 305 | 0.065 | 0.01 | 0.023 | 0.018 |
| GOOBS0808D1-RC7□-240R305-M | | | | 0.08 | 0.014 | Travel Distance：±0.05/300 | |
| GOOBS0808D1-RC5□-290R355-M | 250 | 290 | 355 | 0.065 | 0.01 | 0.023 | 0.018 |
| GOOBS0808D1-RC7□-290R355-M | | | | 0.08 | 0.014 | Travel Distance：±0.05/300 | |

# GOOBS1005-F

| Rolled Ball Screw | | | | |
|---|---|---|---|---|
| Nominal Dia(mm) | 10 | | | |
| Ball Dia(mm) | 2 | | | |
| Lead(mm) | 5 | | | |
| B.C.D(mm) | 10.5 | | | |
| Thread Direction | Right Hand | | | |
| Circuits | 2.7 Returns x 1 Circuit | | | |
| Accuracy | C5X | C5Y | C7Y | C7Z |
| Axial Backlash | 0 | < 0.005 | < 0.005 | < 0.01 |
| Dynamic Load Ca(N) | 2920 | | | |
| Max. Static Load Coa(N) | 4920 | | | |

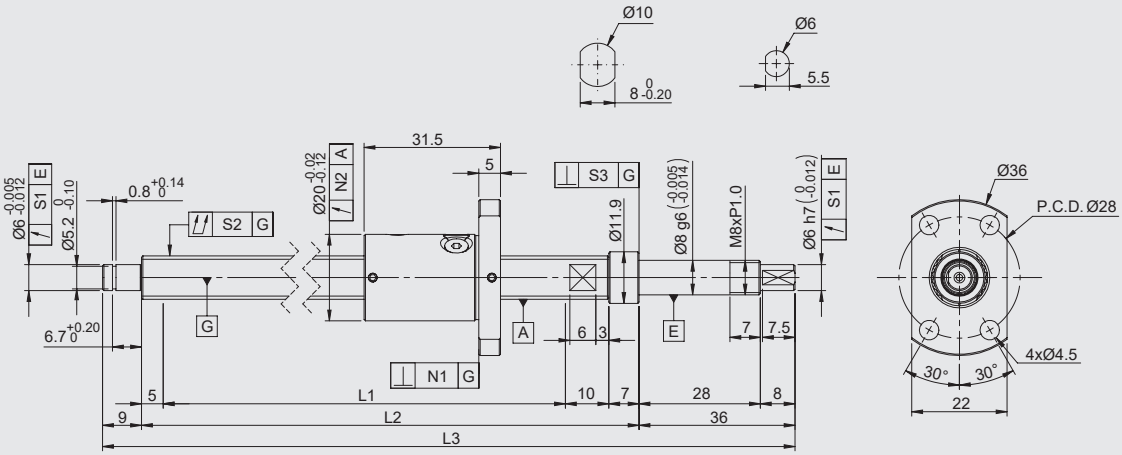


| Specification | Stroke | Shaft Length | | | Deviation Tolerance | Cumulative Deviation Tolerance | Bearing Seat Verticality Tolerance | Flanged Nut Verticality | Nut Deviation Tolerance | Lead Accuracy | |
|---|---|---|---|---|---|---|---|---|---|---|---|
| | | L1 | L2 | L3 | S1 | S2 | S3 | N1 | N2 | Mean Travel | Variation |
| GOOBS1005D3-RC5□-190R257-F | 150 | 190 | 212 | 257 | 0.011 | 0.04 | 0.005 | 0.01 | 0.012 | 0.02 | 0.018 |
| GOOBS1005D3-RC7□-190R257-F | | | | | 0.014 | 0.045 | 0.007 | 0.014 | 0.02 | Travel Distance:±0.05/300 | |
| GOOBS1005D3-RC5□-340R407-F | 300 | 340 | 362 | 407 | 0.011 | 0.065 | 0.005 | 0.01 | 0.012 | 0.025 | 0.020 |
| GOOBS1005D3-RC7□-340R407-F | | | | | 0.014 | 0.08 | 0.007 | 0.014 | 0.02 | Travel Distance:±0.05/300 | |
| GOOBS1005D3-RC5□-490R557-F | 450 | 490 | 512 | 557 | 0.011 | 0.08 | 0.005 | 0.01 | 0.012 | 0.027 | 0.020 |
| GOOBS1005D3-RC7□-490R557-F | | | | | 0.014 | 0.095 | 0.007 | 0.014 | 0.02 | Travel Distance:±0.05/300 | |

# GOOBS1005-F Machining-less to the end shaft

| Rolled Ball Screw | | | | |
|---|---|---|---|---|
| Nominal Dia(mm) | 10 | | | |
| Ball Dia(mm) | 2 | | | |
| Lead(mm) | 5 | | | |
| B.C.D(mm) | 10.5 | | | |
| Thread Direction | Right Hand | | | |
| Circuits | 2.7 Returns x 1 Circuit | | | |
| Accuracy | C5X | C5Y | C7Y | C7Z |
| Axial Backlash | 0 | < 0.005 | < 0.005 | < 0.01 |
| Dynamic Load Ca(N) | 2920 | | | |
| Max. Static Load Coa(N) | 4920 | | | |

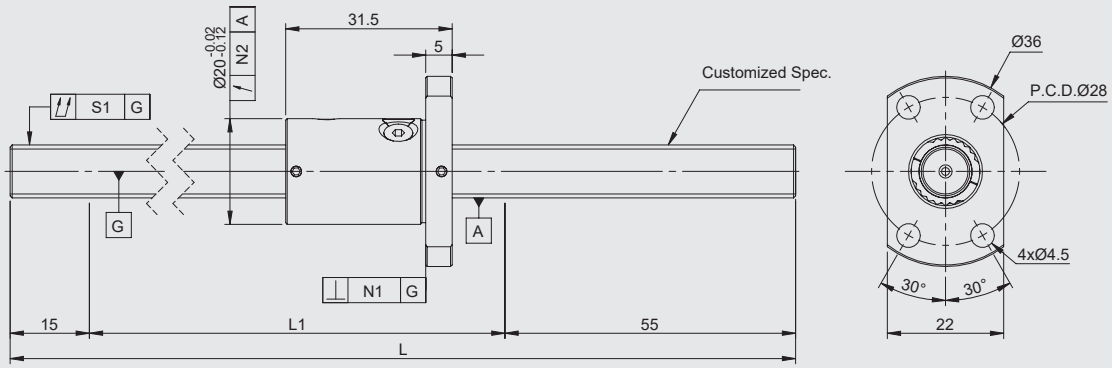


| Specification | Stroke | Shaft Length | | Cumulative Deviation Tolerance | Flanged Nut Verticality | Nut Deviation Tolerance | Lead Accuracy | |
|---|---|---|---|---|---|---|---|---|
| | | L1 | L | S1 | N1 | N2 | Mean Travel | Variation |
| GOOBS1005D3-RC5□-190R260-F | 150 | 190 | 260 | 0.04 | 0.01 | 0.012 | 0.02 | 0.018 |
| GOOBS1005D3-RC7□-190R260-F | | | | 0.045 | 0.014 | 0.02 | Travel Distance：±0.05/300 | |
| GOOBS1005D3-RC5□-340R410-F | 300 | 340 | 410 | 0.065 | 0.01 | 0.012 | 0.025 | 0.018 |
| GOOBS1005D3-RC7□-340R410-F | | | | 0.08 | 0.014 | 0.02 | Travel Distance：±0.05/300 | |
| GOOBS1005D3-RC5□-490R560-F | 450 | 490 | 560 | 0.08 | 0.01 | 0.012 | 0.027 | 0.018 |
| GOOBS1005D3-RC7□-490R560-F | | | | 0.09 | 0.014 | 0.02 | Travel Distance：±0.05/300 | |

# GOOBS1005-M

| Rolled Ball Screw | | | | |
|---|---|---|---|---|
| Nominal Dia(mm) | 10 | | | |
| Ball Dia(mm) | 2 | | | |
| Lead(mm) | 5 | | | |
| B.C.D(mm) | 10.5 | | | |
| Thread Direction | Right Hand | | | |
| Circuits | 2.7 Returns x 1 Circuit | | | |
| Accuracy | C5X | C5Y | C7Y | C7Z |
| Axial Backlash | 0 | < 0.005 | < 0.005 | < 0.01 |
| Dynamic Load Ca(N) | 2920 | | | |
| Max. Static Load Coa(N) | 4920 | | | |

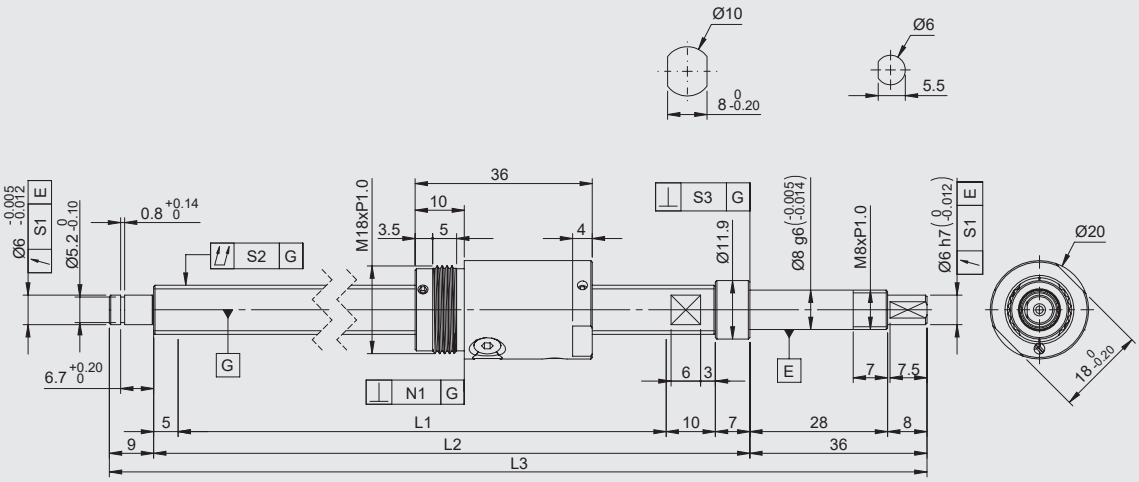


| Specification | Stroke | Shaft Length | | | Deviation Tolerance | Cumulative Deviation Tolerance | Bearing Seat Verticality Tolerance | Nut Verticality Tolerance | Lead Accuracy | |
|---|---|---|---|---|---|---|---|---|---|---|
| | | L1 | L2 | L3 | S1 | S2 | S3 | N1 | Mean Travel | Variation |
| GOOBS1005D3-RC5□-190R257-M | 150 | 190 | 212 | 257 | 0.011 | 0.04 | 0.005 | 0.01 | 0.02 | 0.018 |
| GOOBS1005D3-RC7□-190R257-M | | | | | 0.014 | 0.045 | 0.007 | 0.014 | Travel Distance：±0.05/300 | |
| GOOBS1005D3-RC5□-340R407-M | 300 | 340 | 362 | 407 | 0.011 | 0.065 | 0.005 | 0.01 | 0.025 | 0.020 |
| GOOBS1005D3-RC7□-340R407-M | | | | | 0.014 | 0.08 | 0.007 | 0.014 | Travel Distance：±0.05/300 | |
| GOOBS1005D3-RC5□-490R557-M | 450 | 490 | 512 | 557 | 0.011 | 0.08 | 0.005 | 0.01 | 0.027 | 0.020 |
| GOOBS1005D3-RC7□-490R557-M | | | | | 0.014 | 0.095 | 0.007 | 0.014 | Travel Distance：±0.05/300 | |

# GOOBS1005-M Machining-less to the end shaft

| Rolled Ball Screw | | | | |
|---|---|---|---|---|
| Nominal Dia(mm) | 10 | | | |
| Ball Dia(mm) | 2 | | | |
| Lead(mm) | 5 | | | |
| B.C.D(mm) | 10.5 | | | |
| Thread Direction | Right Hand | | | |
| Circuits | 2.7 Returns x 1 Circuit | | | |
| Accuracy | C5X | C5Y | C7Y | C7Z |
| Axial Backlash | 0 | < 0.005 | < 0.005 | < 0.01 |
| Dynamic Load Ca(N) | 2920 | | | |
| Max. Static Load Coa(N) | 4920 | | | |

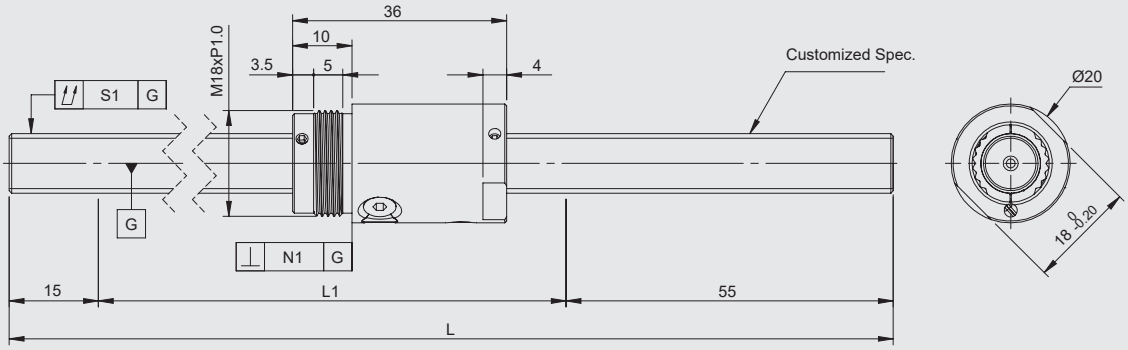


| Specification | Stroke | Shaft Length | | Cumulative Deviation Tolerance | Nut Verticality Tolerance | Lead Accuracy | |
|---|---|---|---|---|---|---|---|
| | | L1 | L | S1 | N1 | Mean Travel | Variation |
| GOOBS1005D3-RC5□-190R260-M | 150 | 190 | 260 | 0.04 | 0.01 | 0.02 | 0.018 |
| GOOBS1005D3-RC7□-190R260-M | | | | 0.045 | 0.014 | Travel Distance：±0.05/300 | |
| GOOBS1005D3-RC5□-340R410-M | 300 | 340 | 410 | 0.065 | 0.01 | 0.025 | 0.018 |
| GOOBS1005D3-RC7□-340R410-M | | | | 0.08 | 0.014 | Travel Distance：±0.05/300 | |
| GOOBS1005D3-RC5□-490R560-M | 450 | 490 | 560 | 0.08 | 0.01 | 0.027 | 0.018 |
| GOOBS1005D3-RC7□-490R560-M | | | | 0.09 | 0.014 | Travel Distance：±0.05/300 | |

# GOOBS1010-F

| Rolled Ball Screw | | | | |
|---|---|---|---|---|
| Nominal Dia(mm) | 10 | | | |
| Ball Dia(mm) | 2 | | | |
| Lead(mm) | 10 | | | |
| B.C.D(mm) | 10.5 | | | |
| Thread Direction | Right Hand | | | |
| Circuits | 1.7 Returns x 2 Circuits | | | |
| Accuracy | C5X | C5Y | C7Y | C7Z |
| Axial Backlash | 0 | < 0.005 | < 0.005 | < 0.01 |
| Dynamic Load Ca(N) | 3860 | | | |
| Max. Static Load Coa(N) | 6000 | | | |

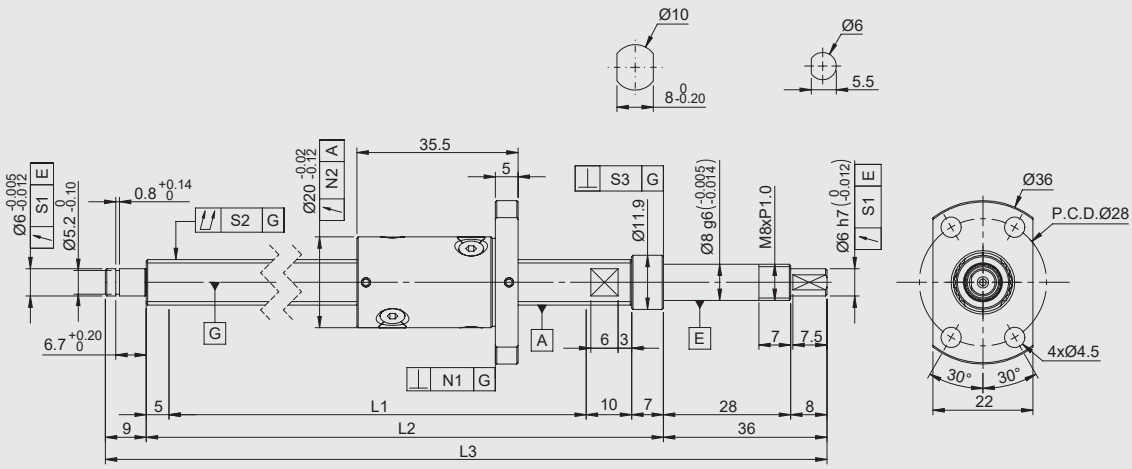


| Specification | Stroke | Shaft Length | | | Deviation Tolerance | Cumulative Deviation Tolerance | Bearing Seat Verticality Tolerance | Nut Verticality Tolerance | Nut Deviation Tolerance | Lead Accuracy | |
|---|---|---|---|---|---|---|---|---|---|---|---|
| | | L1 | L2 | L3 | S1 | S2 | S3 | N1 | N2 | Mean Travel | Variation |
| GOOBS1010D2-RC5□-190R257-F | 150 | 190 | 212 | 257 | 0.011 | 0.04 | 0.005 | 0.01 | 0.012 | 0.02 | 0.018 |
| GOOBS1010D2-RC7□-190R257-F | | | | | 0.014 | 0.045 | 0.007 | 0.014 | 0.02 | Travel Distance:±0.05/300 | |
| GOOBS1010D2-RC5□-340R407-F | 300 | 340 | 362 | 407 | 0.011 | 0.065 | 0.005 | 0.01 | 0.012 | 0.025 | 0.020 |
| GOOBS1010D2-RC7□-340R407-F | | | | | 0.014 | 0.08 | 0.007 | 0.014 | 0.02 | Travel Distance:±0.05/300 | |
| GOOBS1010D2-RC5□-490R557-F | 450 | 490 | 512 | 557 | 0.011 | 0.08 | 0.005 | 0.01 | 0.012 | 0.027 | 0.020 |
| GOOBS1010D2-RC7□-490R557-F | | | | | 0.014 | 0.095 | 0.007 | 0.014 | 0.02 | Travel Distance:±0.05/300 | |

# GOOBS1010-F Machining-less to the end shaft

| Rolled Ball Screw | | | | |
|---|---|---|---|---|
| Nominal Dia(mm) | 10 | | | |
| Ball Dia(mm) | 2 | | | |
| Lead(mm) | 10 | | | |
| B.C.D(mm) | 10.5 | | | |
| Thread Direction | Right Hand | | | |
| Circuits | 1.7 Returns x 2 Circuits | | | |
| Accuracy | C5X | C5Y | C7Y | C7Z |
| Axial Backlash | 0 | < 0.005 | < 0.005 | < 0.01 |
| Dynamic Load Ca(N) | 3860 | | | |
| Max. Static Load Coa(N) | 6000 | | | |

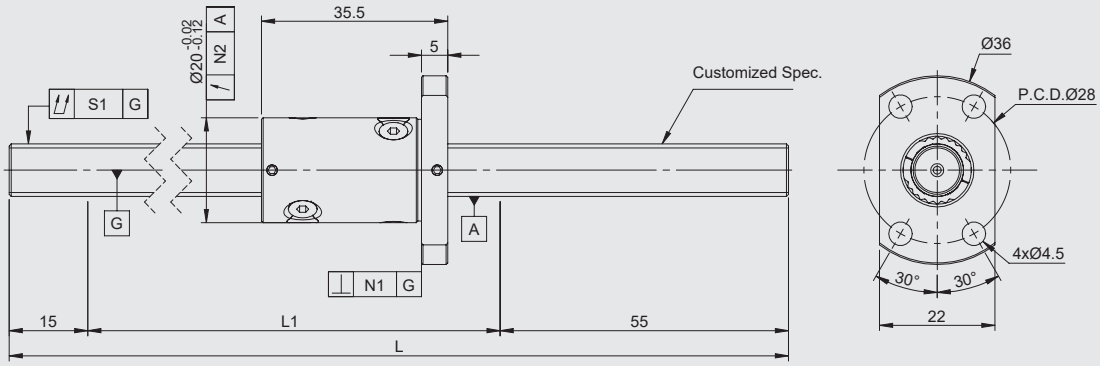


| Specification | Stroke | Shaft Length | | Cumulative Deviation Tolerance | Flanged Nut Verticality | Nut Deviation Tolerance | Lead Accuracy | |
|---|---|---|---|---|---|---|---|---|
| | | L1 | L | S1 | N1 | N2 | Mean Travel | Variation |
| GOOBS1010D2-RC5□-190R260-F | 150 | 190 | 260 | 0.04 | 0.01 | 0.012 | 0.02 | 0.018 |
| GOOBS1010D2-RC7□-190R260-F | | | | 0.045 | 0.014 | 0.02 | Travel Distance：±0.05/300 | |
| GOOBS1010D2-RC5□-340R410-F | 300 | 340 | 410 | 0.065 | 0.01 | 0.012 | 0.025 | 0.018 |
| GOOBS1010D2-RC7□-340R410-F | | | | 0.08 | 0.014 | 0.02 | Travel Distance：±0.05/300 | |
| GOOBS1010D2-RC5□-490R560-F | 450 | 490 | 560 | 0.08 | 0.01 | 0.012 | 0.027 | 0.018 |
| GOOBS1010D2-RC7□-490R560-F | | | | 0.09 | 0.014 | 0.02 | Travel Distance：±0.05/300 | |

# GOOBS1010-M

| Rolled Ball Screw | | | | |
|---|---|---|---|---|
| Nominal Dia(mm) | 10 | | | |
| Ball Dia(mm) | 2 | | | |
| Lead(mm) | 10 | | | |
| B.C.D(mm) | 10.5 | | | |
| Thread Direction | Right Hand | | | |
| Circuits | 1.7 Returns x 2 Circuits | | | |
| Accuracy | C5X | C5Y | C7Y | C7Z |
| Axial Backlash | 0 | < 0.005 | < 0.005 | < 0.01 |
| Dynamic Load Ca(N) | 3860 | | | |
| Max. Static Load Coa(N) | 6000 | | | |

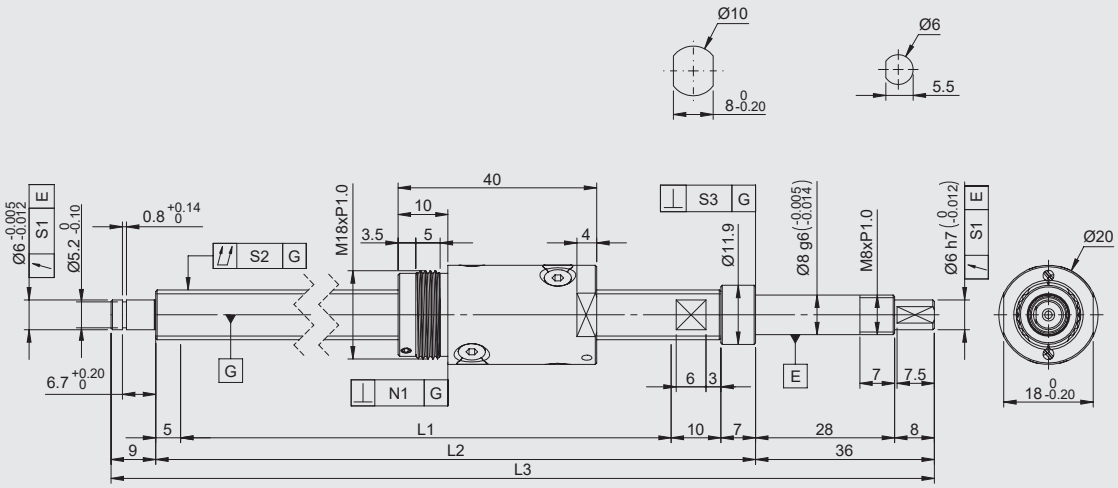


| Specification | Stroke | Shaft Length | | | Deviation Tolerance | Cumulative Deviation Tolerance | Bearing Seat Verticality Tolerance | Nut Verticality Tolerance | Lead Accuracy | |
|---|---|---|---|---|---|---|---|---|---|---|
| | | L1 | L2 | L3 | S1 | S2 | S3 | N1 | Mean Travel | Variation |
| GOOBS1010D2-RC5□-190R257-M | 150 | 190 | 212 | 257 | 0.011 | 0.04 | 0.005 | 0.01 | 0.02 | 0.018 |
| GOOBS1010D2-RC7□-190R257-M | | | | | 0.014 | 0.045 | 0.007 | 0.014 | Travel Distance:±0.05/300 | |
| GOOBS1010D2-RC5□-340R407-M | 300 | 340 | 362 | 407 | 0.011 | 0.065 | 0.005 | 0.01 | 0.025 | 0.020 |
| GOOBS1010D2-RC7□-340R407-M | | | | | 0.014 | 0.08 | 0.007 | 0.014 | Travel Distance:±0.05/300 | |
| GOOBS1010D2-RC5□-490R557-M | 450 | 490 | 512 | 557 | 0.011 | 0.08 | 0.005 | 0.01 | 0.027 | 0.020 |
| GOOBS1010D2-RC7□-490R557-M | | | | | 0.014 | 0.095 | 0.007 | 0.014 | Travel Distance:±0.05/300 | |

# GOOBS1010-M Machining-less to the end shaft

| Rolled Ball Screw | | | | |
|---|---|---|---|---|
| Nominal Dia(mm) | 10 | | | |
| Ball Dia(mm) | 2 | | | |
| Lead(mm) | 10 | | | |
| B.C.D(mm) | 10.5 | | | |
| Thread Direction | Right Hand | | | |
| Circuits | 1.7 Returns x 2 Circuits | | | |
| Accuracy | C5X | C5Y | C7Y | C7Z |
| Axial Backlash | 0 | < 0.005 | < 0.005 | < 0.01 |
| Dynamic Load Ca(N) | 3860 | | | |
| Max. Static Load Coa(N) | 6000 | | | |

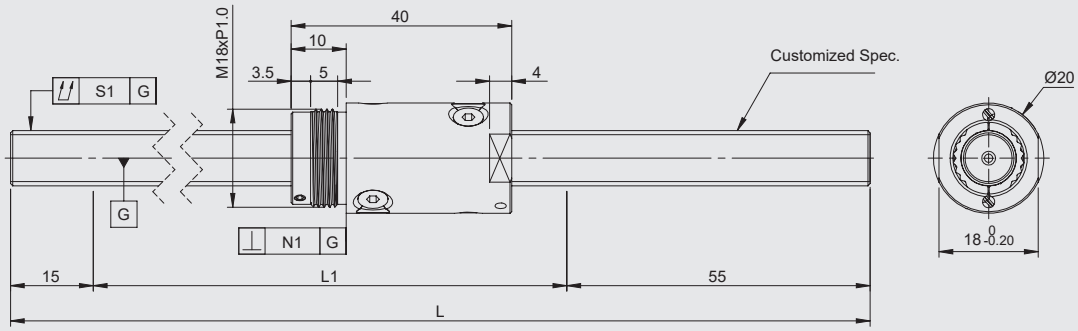


| Specification | Stroke | Shaft Length | | Cumulative Deviation Tolerance | Nut Verticality Tolerance | Lead Accuracy | |
|---|---|---|---|---|---|---|---|
| | | L1 | L | S1 | N1 | Mean Travel | Variation |
| GOOBS1010D2-RC5□-190R260-M | 150 | 190 | 260 | 0.04 | 0.01 | 0.02 | 0.018 |
| GOOBS1010D2-RC7□-190R260-M | | | | 0.045 | 0.014 | Travel Distance：±0.05/300 | |
| GOOBS1010D2-RC5□-340R410-M | 300 | 340 | 410 | 0.065 | 0.01 | 0.025 | 0.018 |
| GOOBS1010D2-RC7□-340R410-M | | | | 0.08 | 0.014 | Travel Distance：±0.05/300 | |
| GOOBS1010D2-RC5□-490R560-M | 450 | 490 | 560 | 0.08 | 0.01 | 0.027 | 0.018 |
| GOOBS1010D2-RC7□-490R560-M | | | | 0.09 | 0.014 | Travel Distance：±0.05/300 | |

## GOOMS Series Model Number Description

GOOMS 2P28 Z - 12 05 KS -

| Ref. | |
|---|---|
| MS | Stepper Motor+Ball Screw |

| Motor Size | |
|---|---|
| 2P28 | 2phase 28mm |
| 2P42 | 2phase 42mm |

| Motor Axial Clearance | |
|---|---|
| Z | (0mm) Preloaded |
| N | (Xmm) Non-preloaded |

| Dia |
|---|
| 06 |
| 08 |

| Lead |
|---|
| 01 |
| 02 |
| 04 |
| 05 |

| Circulation Types | |
|---|---|
| D1 | Internal Return=1.7 returns per circuit |
| D2 | Internal Return=1.7 returns x 2 circuits |
| D3 | Internal Return=2.7 returns per circuit |
| KS | Internal Key Way=3 returns per circuit |

## GOOMS Series Model Number Description

R C7 X - 900 R 1000 - M

| Machining Process | |
|---|---|
| G | Ground |
| R | Rolled |

| Accuracy |
|---|
| C5 |
| C7 |

| Axial Backlash | |
|---|---|
| X | (0mm) preloaded |
| Y | < 0.005mm |
| Z | < 0.01mm |

Thread Length

| Thread Direction | |
|---|---|
| R | Right Hand |
| L | Left Hand |
| RL | Left & Right Hand |

Full Length

| Nut Type | |
|---|---|
| M | Threaded |
| F | Flanged |
| H | Rectangular |

## ◎ Models

Threaded

Flanged

Rectangular

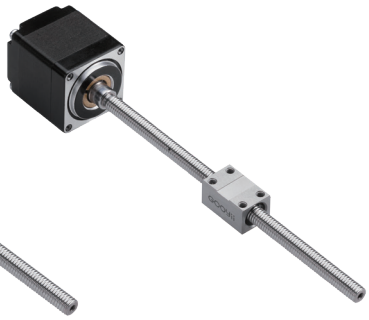

# GOOMS2P28Z-0601-F

| Rolled Ball Screw | | | | |
|---|---|---|---|---|
| Nominal Dia(mm) | 6 | | | |
| Ball Dia(mm) | 0.8 | | | |
| Lead(mm) | 1 | | | |
| B.C.D(mm) | 6.2 | | | |
| Thread Direction | Right Hand | | | |
| Circuits | 1 Return x 3 Circuits | | | |
| Accuracy | C5X | C5Y | C7Y | C7Z |
| Axial Backlash | 0 | < 0.005 | < 0.005 | < 0.01 |
| Dynamic Load Ca(N) | 930 | | | |
| Max. Static Load Coa(N) | | | | |

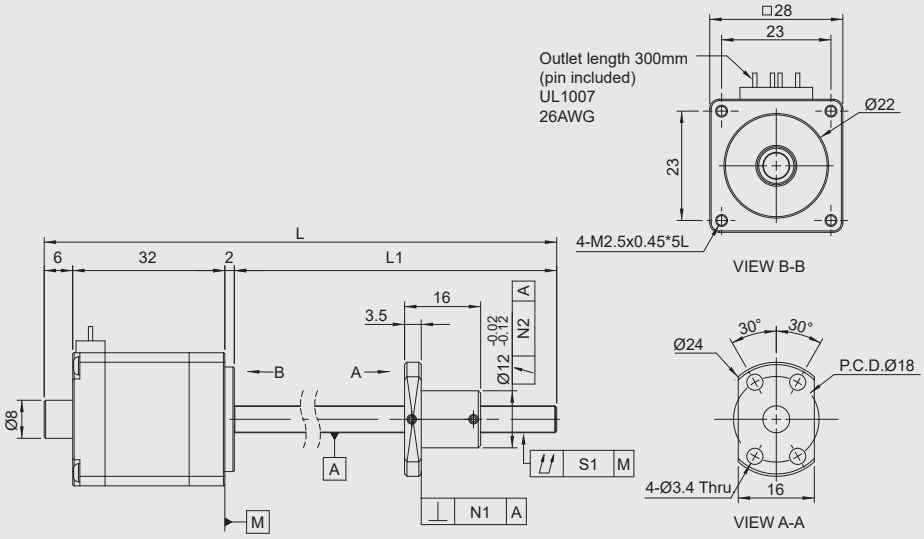


| Specification | Stroke | Shaft Length | | Cumulative Deviation Tolerance | Flanged Nut Verticality | Nut Deviation Tolerance | Lead Accuracy | |
|---|---|---|---|---|---|---|---|---|
| | | L1 | L | S1 | N1 | N2 | Mean Travel | Variation |
| GOOMS2P28Z-0601KS-RC5□-65R105-F | 40 | 65 | 105 | 0.035 | 0.01 | 0.012 | 0.018 | 0.018 |
| GOOMS2P28Z-0601KS-RC7□-65R105-F | | | | 0.045 | 0.014 | 0.02 | Travel Distance:±0.05/300 | |
| GOOMS2P28Z-0601KS-RC5□-95R135-F | 70 | 95 | 135 | 0.035 | 0.01 | 0.012 | 0.018 | 0.018 |
| GOOMS2P28Z-0601KS-RC7□-95R135-F | | | | 0.045 | 0.014 | 0.02 | Travel Distance:±0.05/300 | |
| GOOMS2P28Z-0601KS-RC5□-125R165-F | 100 | 125 | 165 | 0.035 | 0.01 | 0.012 | 0.02 | 0.018 |
| GOOMS2P28Z-0601KS-RC7□-125R165-F | | | | 0.045 | 0.014 | 0.02 | Travel Distance:±0.05/300 | |

| Motor | |
|---|---|
| Phase | 2 |
| Step Angle | 1.8˚±5%(Full step, unload) |
| Rated Voltage (V) | 3.8 |
| Current / Phase(A) | 0.67 |
| Resistor / Phase (Ω) | 5.6±10% |
| Inductor / Phase (mH) | 3.4±15% |
| Moment of Inertia (kg·m²) | $9x10^{-7}$ |
| Holding Torque (g·cm) | 600 |

Rotation Speed-Torque Characteristics

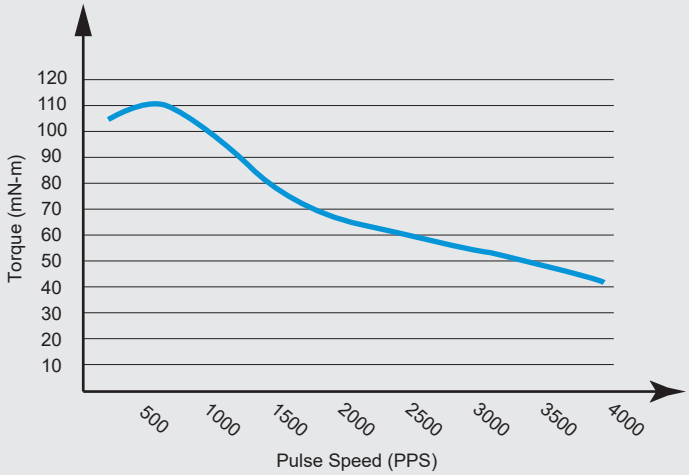


Wiring Diagram

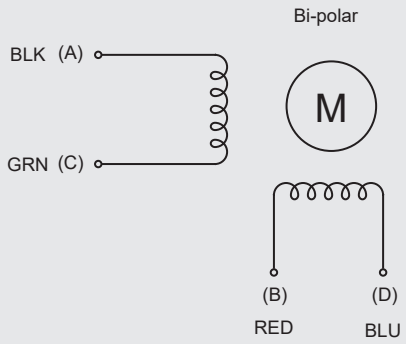

# GOOMS2P28Z-0601-H

| Rolled Ball Screw | | | | |
|---|---|---|---|---|
| Nominal Dia(mm) | 6 | | | |
| Ball Dia(mm) | 0.8 | | | |
| Lead(mm) | 1 | | | |
| B.C.D(mm) | 6.2 | | | |
| Thread Direction | Right Hand | | | |
| Circuits | 1 Return x 3 Circuits | | | |
| Accuracy | C5X | C5Y | C7Y | C7Z |
| Axial Backlash | 0 | < 0.005 | < 0.005 | < 0.01 |
| Dynamic Load Ca(N) | 550 | | | |
| Max. Static Load Coa(N) | 930 | | | |

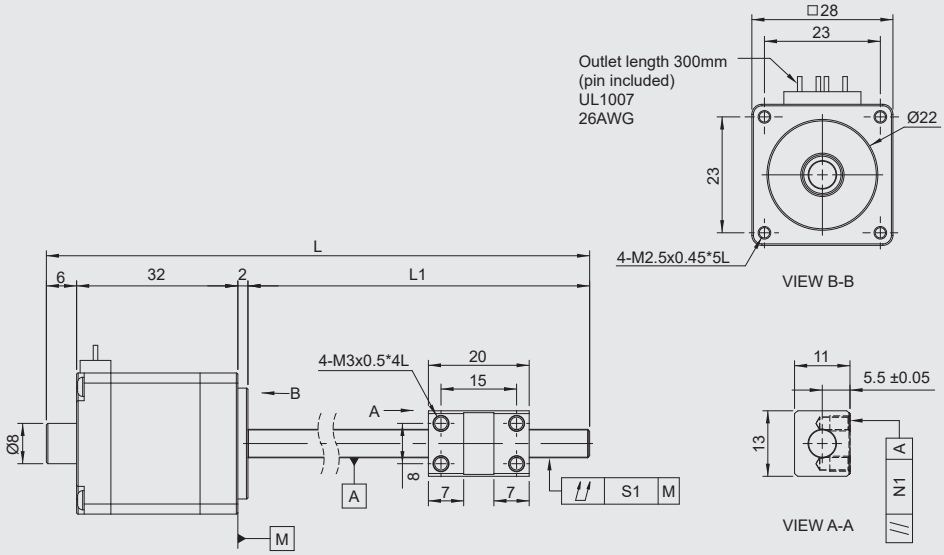


| Specification | Stroke | Shaft Length | | Cumulative Deviation Tolerance | Nut Parallelism Tolerance | Lead Accuracy | |
|---|---|---|---|---|---|---|---|
| | | L1 | L | S1 | N1 | Mean Travel | Variation |
| GOOMS2P28Z-0601KS-RC5□-65R105-H | 40 | 65 | 105 | 0.035 | 0.01 | 0.018 | 0.018 |
| GOOMS2P28Z-0601KS-RC7□-65R105-H | | | | 0.045 | 0.017 | Travel Distance：±0.05/300 | |
| GOOMS2P28Z-0601KS-RC5□-95R135-H | 70 | 95 | 135 | 0.035 | 0.01 | 0.018 | 0.018 |
| GOOMS2P28Z-0601KS-RC7□-95R135-H | | | | 0.045 | 0.017 | Travel Distance：±0.05/300 | |
| GOOMS2P28Z-0601KS-RC5□-125R165-H | 100 | 125 | 165 | 0.035 | 0.01 | 0.02 | 0.018 |
| GOOMS2P28Z-0601KS-RC7□-125R165-H | | | | 0.045 | 0.017 | Travel Distance：±0.05/300 | |

| Motor | |
|---|---|
| Phase | 2 |
| Step Angle | 1.8˚±5%(Full step, unload) |
| Rated Voltage (V) | 3.8 |
| Current / Phase(A) | 0.67 |
| Resistor / Phase (Ω) | 5.6±10% |
| Inductor / Phase (mH) | 3.4±15% |
| Moment of Inertia (kg·m²) | $9x10^{-7}$ |
| Holding Torque (g·cm) | 600 |

Rotation Speed-Torque Characteristics

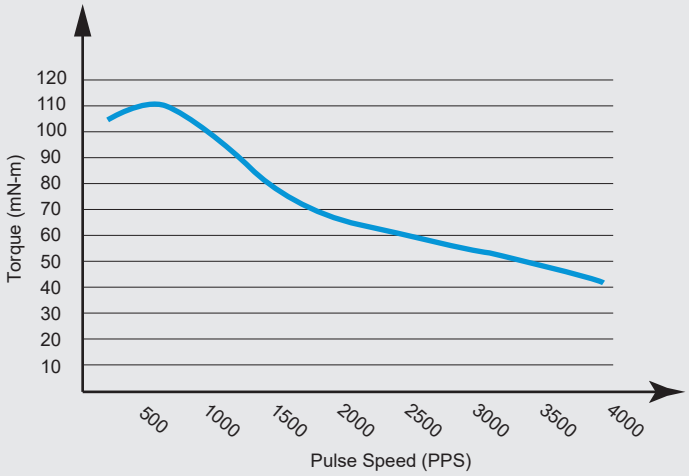


Wiring Diagram

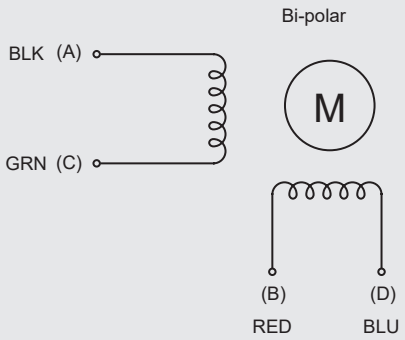

# GOOMS2P28Z-0601-M

| Rolled Ball Screw | | | | |
|---|---|---|---|---|
| Nominal Dia(mm) | 6 | | | |
| Ball Dia(mm) | 0.8 | | | |
| Lead(mm) | 1 | | | |
| B.C.D(mm) | 6.2 | | | |
| Thread Direction | Right Hand | | | |
| Circuits | 1 Return x 3 Circuits | | | |
| Accuracy | C5X | C5Y | C7Y | C7Z |
| Axial Backlash | 0 | < 0.005 | < 0.005 | < 0.01 |
| Dynamic Load Ca(N) | 550 | | | |
| Max. Static Load Coa(N) | 930 | | | |

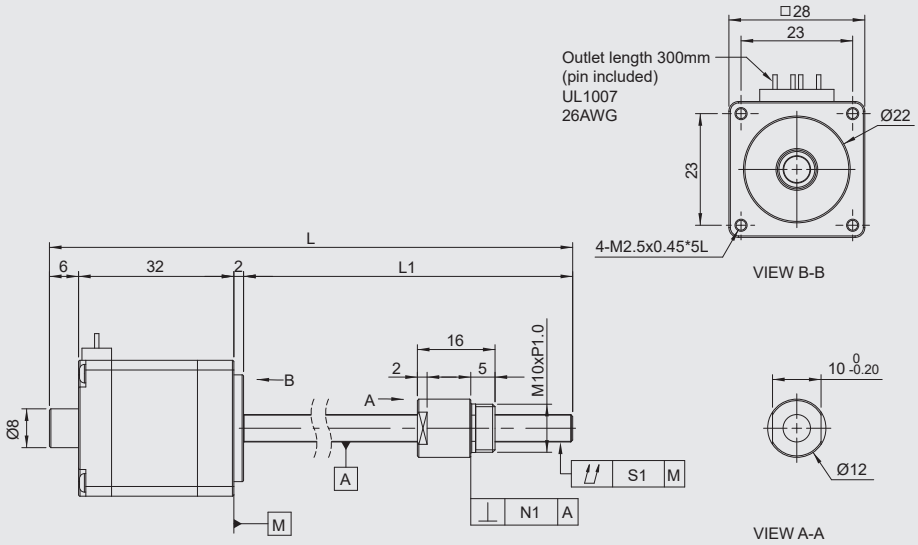


| Specification | Stroke | Shaft Length | | Cumulative Deviation Tolerance | Nut Verticality Tolerance | Lead Accuracy | |
|---|---|---|---|---|---|---|---|
| | | L1 | L | S1 | N1 | Mean Travel | Variation |
| GOOMS2P28Z-0601KS-RC5□-65R105-M | 40 | 65 | 105 | 0.035 | 0.01 | 0.018 | 0.018 |
| GOOMS2P28Z-0601KS-RC7□-65R105-M | | | | 0.045 | 0.014 | Travel Distance：±0.05/300 | |
| GOOMS2P28Z-0601KS-RC5□-95R135-M | 70 | 95 | 135 | 0.035 | 0.01 | 0.018 | 0.018 |
| GOOMS2P28Z-0601KS-RC7□-95R135-M | | | | 0.045 | 0.014 | Travel Distance：±0.05/300 | |
| GOOMS2P28Z-0601KS-RC5□-125R165-M | 100 | 125 | 165 | 0.035 | 0.01 | 0.02 | 0.018 |
| GOOMS2P28Z-0601KS-RC7□-125R165-M | | | | 0.045 | 0.014 | Travel Distance：±0.05/300 | |

| Motor | |
|---|---|
| Phase | 2 |
| Step Angle | 1.8˚±5%(Full step, unload) |
| Rated Voltage (V) | 3.8 |
| Current / Phase(A) | 0.67 |
| Resistor / Phase (Ω) | 5.6±10% |
| Inductor / Phase (mH) | 3.4±15% |
| Moment of Inertia (kg·m²) | $9x10^{-7}$ |
| Holding Torque (g·cm) | 600 |

Rotation Speed-Torque Characteristics

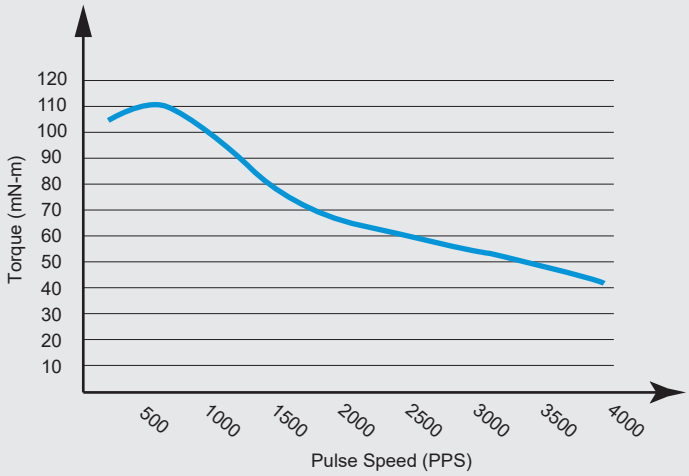


Wiring Diagram

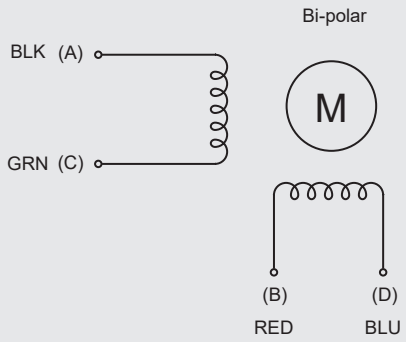

# GOOMS2P28Z-0602-F

| Rolled Ball Screw | | | | |
|---|---|---|---|---|
| Nominal Dia(mm) | 6 | | | |
| Ball Dia(mm) | 0.8 | | | |
| Lead(mm) | 2 | | | |
| B.C.D(mm) | 6.2 | | | |
| Thread Direction | Right Hand | | | |
| Circuits | 1 Return x 3 Circuits | | | |
| Accuracy | C5X | C5Y | C7Y | C7Z |
| Axial Backlash | 0 | < 0.005 | < 0.005 | < 0.01 |
| Dynamic Load Ca(N) | 550 | | | |
| Max. Static Load Coa(N) | 930 | | | |

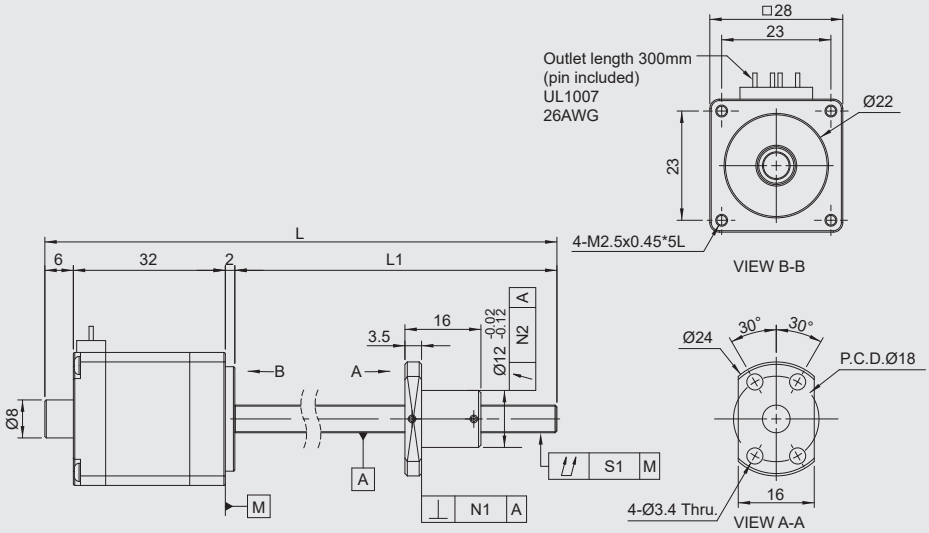


| Specification | Stroke | Shaft Length | | Cumulative Deviation Tolerance | Flanged Nut Verticality | Nut Deviation Tolerance | Lead Accuracy | |
|---|---|---|---|---|---|---|---|---|
| | | L1 | L | S1 | N1 | N2 | Mean Travel | Variation |
| GOOMS2P28Z-0602KS-RC5□-65R105-F | 40 | 65 | 105 | 0.035 | 0.01 | 0.012 | 0.018 | 0.018 |
| GOOMS2P28Z-0602KS-RC7□-65R105-F | | | | 0.045 | 0.014 | 0.02 | Travel Distance：±0.05/300 | |
| GOOMS2P28Z-0602KS-RC5□-95R135-F | 70 | 95 | 135 | 0.035 | 0.01 | 0.012 | 0.018 | 0.018 |
| GOOMS2P28Z-0602KS-RC7□-95R135-F | | | | 0.045 | 0.014 | 0.02 | Travel Distance：±0.05/300 | |
| GOOMS2P28Z-0602KS-RC5□-125R165-F | 100 | 125 | 165 | 0.035 | 0.01 | 0.012 | 0.02 | 0.018 |
| GOOMS2P28Z-0602KS-RC7□-125R165-F | | | | 0.045 | 0.014 | 0.02 | Travel Distance：±0.05/300 | |

| Motor | |
|---|---|
| Phase | 2 |
| Step Angle | 1.8°±5%(Full step, unload) |
| Rated Voltage (V) | 3.8 |
| Current / Phase(A) | 0.67 |
| Resistor / Phase (Ω) | 5.6±10% |
| Inductor / Phase (mH) | 3.4±15% |
| Moment of Inertia (kg·m²) | $9x10^{-7}$ |
| Holding Torque (g·cm) | 600 |

Rotation Speed-Torque Characteristics

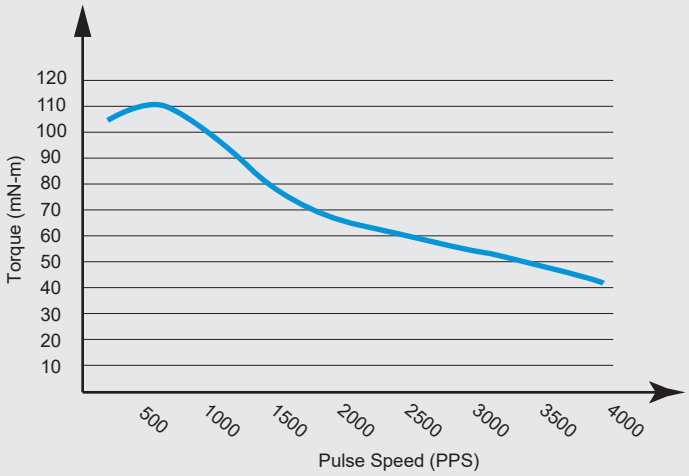


Wiring Diagram

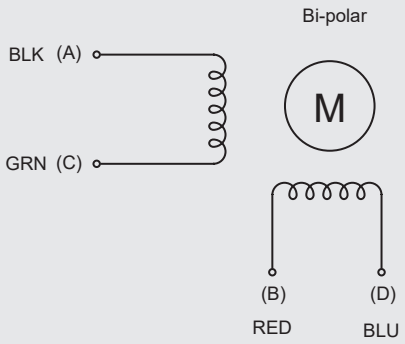

# GOOMS2P28Z-0602-H

| Rolled Ball Screw | | | | |
|---|---|---|---|---|
| Nominal Dia(mm) | 6 | | | |
| Ball Dia(mm) | 0.8 | | | |
| Lead(mm) | 2 | | | |
| B.C.D(mm) | 6.2 | | | |
| Thread Direction | Right Hand | | | |
| Circuits | 1 Return x 3 Circuits | | | |
| Accuracy | C5X | C5Y | C7Y | C7Z |
| Axial Backlash | 0 | < 0.005 | < 0.005 | < 0.01 |
| Dynamic Load Ca(N) | 550 | | | |
| Max. Static Load Coa(N) | 930 | | | |

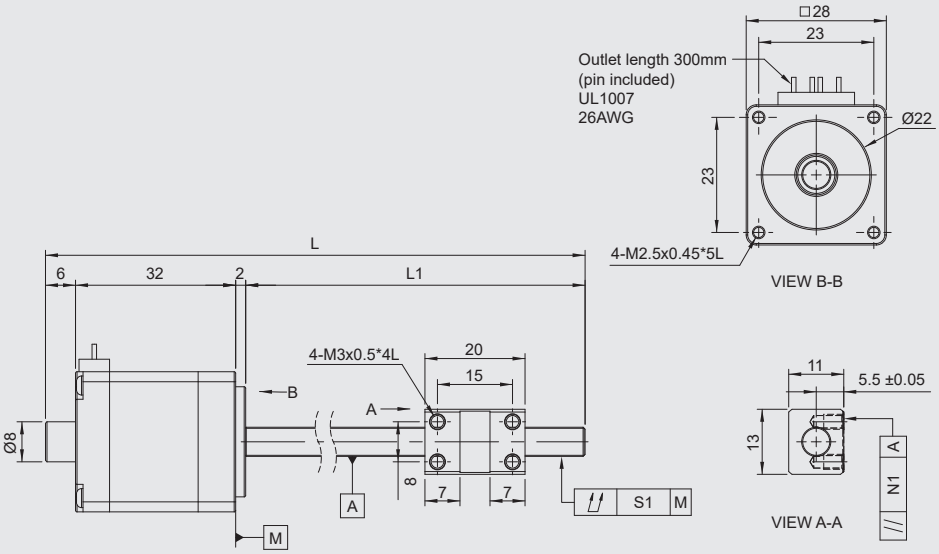


| Specification | Stroke | Shaft Length | | Cumulative Deviation Tolerance | Nut Parallelism Tolerance | Lead Accuracy | |
|---|---|---|---|---|---|---|---|
| | | L1 | L | S1 | N1 | Mean Travel | Variation |
| GOOMS2P28Z-0602KS-RC5□-65R105-H | 40 | 65 | 105 | 0.035 | 0.01 | 0.018 | 0.018 |
| GOOMS2P28Z-0602KS-RC7□-65R105-H | | | | 0.045 | 0.017 | Travel Distance：±0.05/300 | |
| GOOMS2P28Z-0602KS-RC5□-95R135-H | 70 | 95 | 135 | 0.035 | 0.01 | 0.018 | 0.018 |
| GOOMS2P28Z-0602KS-RC7□-95R135-H | | | | 0.045 | 0.017 | Travel Distance：±0.05/300 | |
| GOOMS2P28Z-0602KS-RC5□-125R165-H | 100 | 125 | 165 | 0.035 | 0.01 | 0.02 | 0.018 |
| GOOMS2P28Z-0602KS-RC7□-125R165-H | | | | 0.045 | 0.017 | Travel Distance：±0.05/300 | |

| Motor | |
|---|---|
| Phase | 2 |
| Step Angle | 1.8°±5%(Full step, unload) |
| Rated Voltage (V) | 3.8 |
| Current / Phase(A) | 0.67 |
| Resistor / Phase (Ω) | 5.6±10% |
| Inductor / Phase (mH) | 3.4±15% |
| Moment of Inertia (kg·m²) | $9x10^{-7}$ |
| Holding Torque (g·cm) | 600 |

Rotation Speed-Torque Characteristics

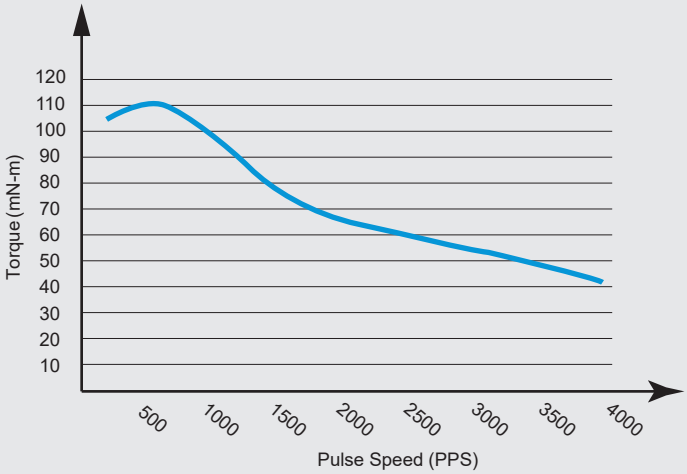


Wiring Diagram

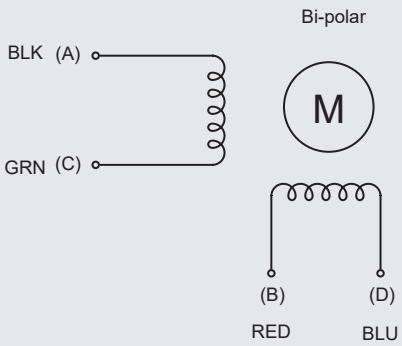

# GOOMS2P28Z-0602-M

| Rolled Ball Screw | | | | |
|---|---|---|---|---|
| Nominal Dia(mm) | 6 | | | |
| Ball Dia(mm) | 0.8 | | | |
| Lead(mm) | 2 | | | |
| B.C.D(mm) | 6.2 | | | |
| Thread Direction | Right Hand | | | |
| Circuits | 1 Return x 3 Circuits | | | |
| Accuracy | C5X | C5Y | C7Y | C7Z |
| Axial Backlash | 0 | < 0.005 | < 0.005 | < 0.01 |
| Dynamic Load Ca(N) | 550 | | | |
| Max. Static Load Coa(N) | 930 | | | |

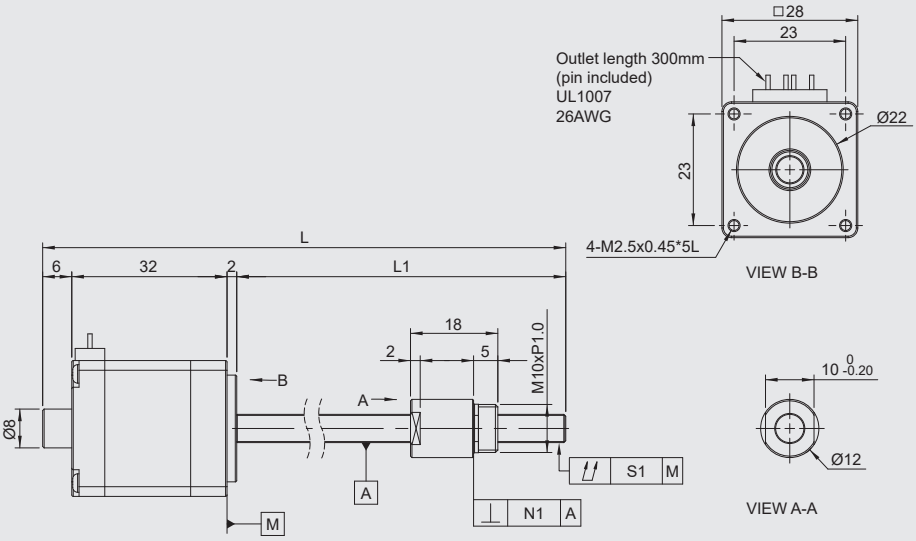


| Specification | Stroke | Shaft Length | | Cumulative Deviation Tolerance | Nut Verticality Tolerance | Lead Accuracy | |
|---|---|---|---|---|---|---|---|
| | | L1 | L | S1 | N1 | Mean Travel | Variation |
| GOOMS2P28Z-0602KS-RC5□-65R105-M | 40 | 65 | 105 | 0.035 | 0.01 | 0.018 | 0.018 |
| GOOMS2P28Z-0602KS-RC7□-65R105-M | | | | 0.045 | 0.014 | Travel Distance：±0.05/300 | |
| GOOMS2P28Z-0602KS-RC5□-95R135-M | 70 | 95 | 135 | 0.035 | 0.01 | 0.018 | 0.018 |
| GOOMS2P28Z-0602KS-RC7□-95R135-M | | | | 0.045 | 0.014 | Travel Distance：±0.05/300 | |
| GOOMS2P28Z-0602KS-RC5□-125R165-M | 100 | 125 | 165 | 0.035 | 0.01 | 0.02 | 0.018 |
| GOOMS2P28Z-0602KS-RC7□-125R165-M | | | | 0.045 | 0.014 | Travel Distance：±0.05/300 | |

| Motor | |
|---|---|
| Phase | 2 |
| Step Angle | 1.8˚±5%(Full step, unload |
| Rated Voltage (V) | 3.8 |
| Current / Phase(A) | 0.67 |
| Resistor / Phase (Ω) | 5.6±10% |
| Inductor / Phase (mH) | 3.4±15% |
| Moment of Inertia (kg·m$^2$) | 9x10$^{-7}$ |
| Holding Torque (g·cm) | 600 |

Rotation Speed-Torque Characteristics

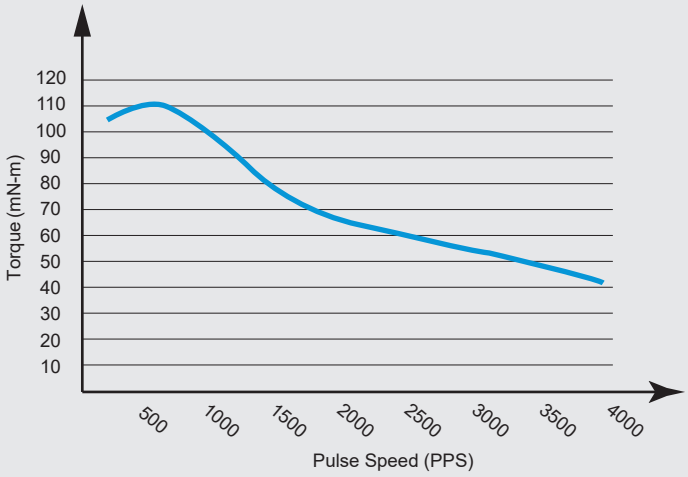


Wiring Diagram

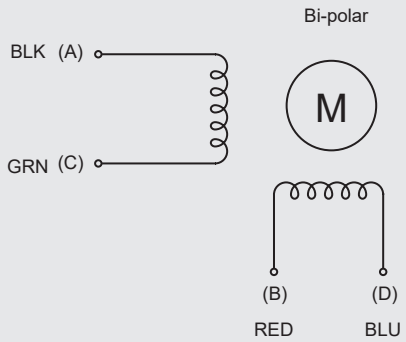

# GOOMS2P42Z-0801-F

| Rolled Ball Screw | | | | |
|---|---|---|---|---|
| Nominal Dia(mm) | 8 | | | |
| Ball Dia(mm) | 0.8 | | | |
| Lead(mm) | 1 | | | |
| B.C.D(mm) | 8.3 | | | |
| Thread Direction | Right Hand | | | |
| Circuits | 1 Return x 3 Circuits | | | |
| Accuracy | C5X | C5Y | C7Y | C7Z |
| Axial Backlash | 0 | < 0.005 | < 0.005 | < 0.01 |
| Dynamic Load Ca(N) | 700 | | | |
| Max. Static Load Coa(N) | 1420 | | | |

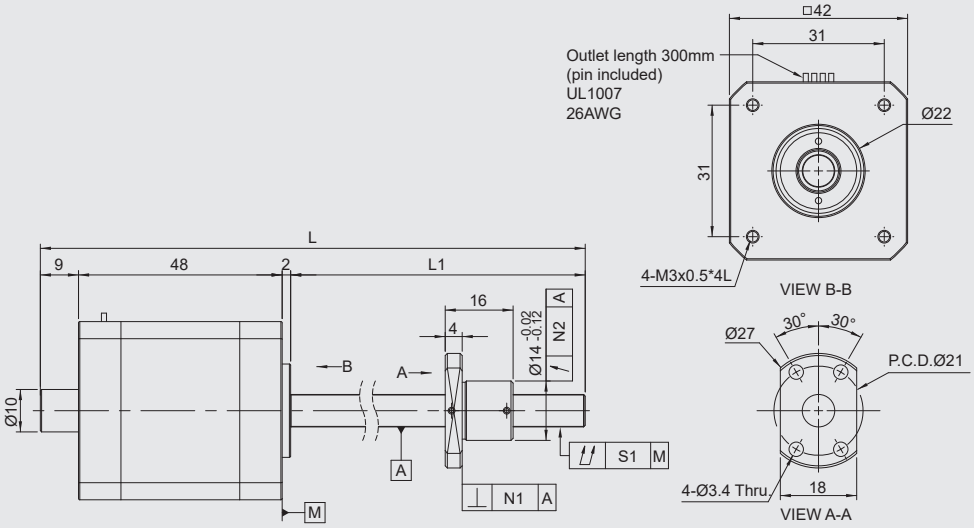


| Specification | Stroke | Shaft Length | | Cumulative Deviation Tolerance | Flanged Nut Verticality | Nut Deviation Tolerance | Lead Accuracy | |
|---|---|---|---|---|---|---|---|---|
| | | L1 | L | S1 | N1 | N2 | Mean Travel | Variation |
| GOOMS2P42Z-0801KS-RC5□-65R124-F | 40 | 65 | 124 | 0.035 | 0.01 | 0.012 | 0.018 | 0.018 |
| GOOMS2P42Z-0801KS-RC7□-65R124-F | | | | 0.045 | 0.014 | 0.02 | Travel Distance：±0.05/300 | |
| GOOMS2P42Z-0801KS-RC5□-95R154-F | 70 | 95 | 154 | 0.035 | 0.01 | 0.012 | 0.018 | 0.018 |
| GOOMS2P42Z-0801KS-RC7□-95R154-F | | | | 0.045 | 0.014 | 0.02 | Travel Distance：±0.05/300 | |
| GOOMS2P42Z-0801KS-RC5□-125R184-F | 100 | 125 | 184 | 0.035 | 0.01 | 0.012 | 0.02 | 0.018 |
| GOOMS2P42Z-0801KS-RC7□-125R184-F | | | | 0.045 | 0.014 | 0.02 | Travel Distance：±0.05/300 | |

| Motor | |
|---|---|
| Phase | 2 |
| Step Angle | 1.8°±5%(Full step, unload) |
| Rated Voltage (V) | 4.4 |
| Current / Phase(A) | 0.8 |
| Resistor / Phase (Ω) | 5.5±10% |
| Inductor / Phase (mH) | 1.5±15% |
| Moment of Inertia (g·m²) | 50 |
| Holding Torque (mg·cm) | 450 |

Rotation Speed-Torque Characteristics

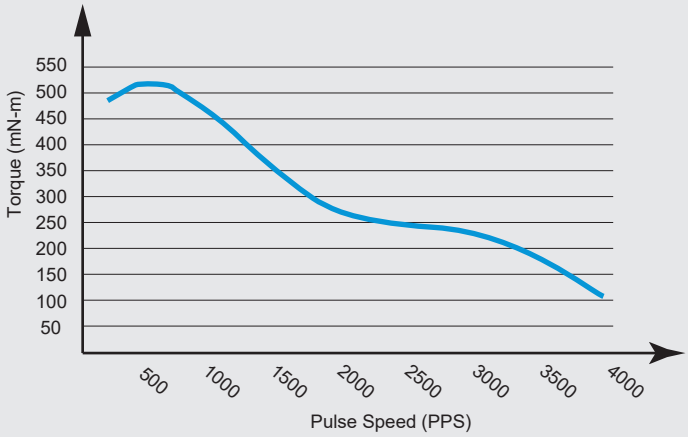


Wiring Diagram

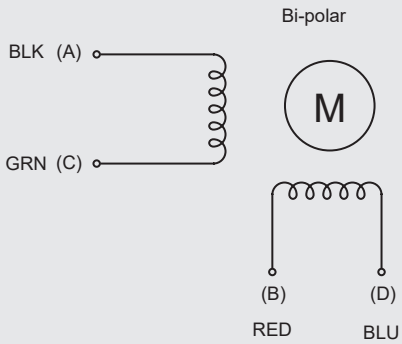

# GOOMS2P42Z-0801-H

| Rolled Ball Screw | | | | |
|---|---|---|---|---|
| Nominal Dia(mm) | 8 | | | |
| Ball Dia(mm) | 0.8 | | | |
| Lead(mm) | 1 | | | |
| B.C.D(mm) | 8.3 | | | |
| Thread Direction | Right Hand | | | |
| Circuits | 1 Return x 3 Circuits | | | |
| Accuracy | C5X | C5Y | C7Y | C7Z |
| Axial Backlash | 0 | < 0.005 | < 0.005 | < 0.01 |
| Dynamic Load Ca(N) | 700 | | | |
| Max. Static Load Coa(N) | 1420 | | | |

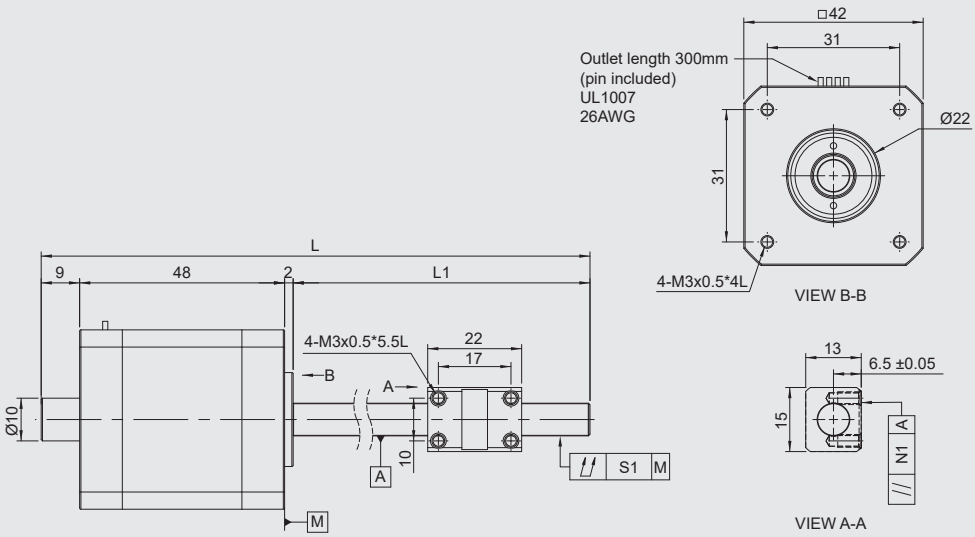


| Specification | Stroke | Shaft Length | | Cumulative Deviation Tolerance | Nut Parallelism Tolerance | Lead Accuracy | |
|---|---|---|---|---|---|---|---|
| | | L1 | L | S1 | N1 | Mean Travel | Variation |
| GOOMS2P42Z-0801KS-RC5□-65R124-H | 40 | 65 | 124 | 0.035 | 0.01 | 0.018 | 0.018 |
| GOOMS2P42Z-0801KS-RC7□-65R124-H | | | | 0.045 | 0.014 | Travel Distance：±0.05/300 | |
| GOOMS2P42Z-0801KS-RC5□-95R154-H | 70 | 95 | 154 | 0.035 | 0.01 | 0.018 | 0.018 |
| GOOMS2P42Z-0801KS-RC7□-95R154-H | | | | 0.045 | 0.014 | Travel Distance：±0.05/300 | |
| GOOMS2P42Z-0801KS-RC5□-125R184-H | 100 | 125 | 184 | 0.035 | 0.01 | 0.02 | 0.018 |
| GOOMS2P42Z-0801KS-RC7□-125R184-H | | | | 0.045 | 0.014 | Travel Distance：±0.05/300 | |

| Motor | |
|---|---|
| Phase | 2 |
| Step Angle | 1.8˚±5%(Full step, unload) |
| Rated Voltage (V) | 4.4 |
| Current / Phase(A) | 0.8 |
| Resistor / Phase (Ω) | 5.5±10% |
| Inductor / Phase (mH) | 1.5±15% |
| Moment of Inertia (g·m²) | 50 |
| Holding Torque (mg·cm) | 450 |

Rotation Speed-Torque Characteristics

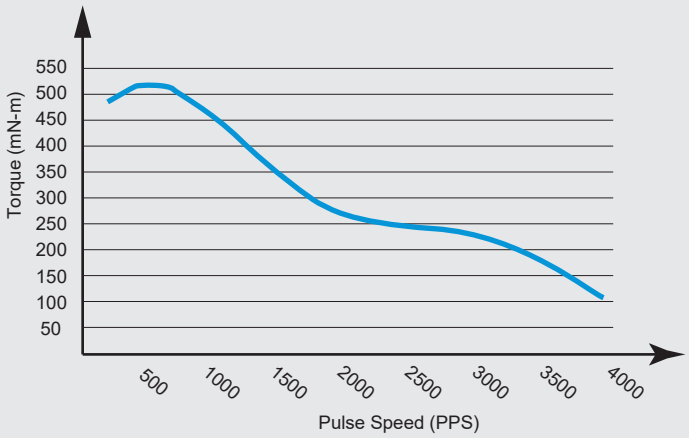


Wiring Diagram

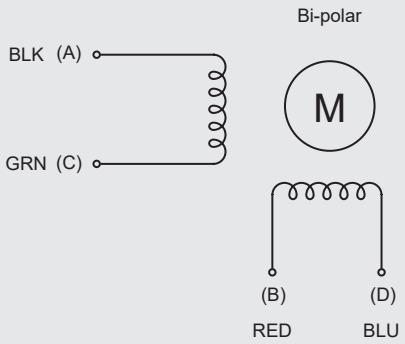

# GOOMS2P42Z-0801-M

| Rolled Ball Screw | | | | |
|---|---|---|---|---|
| Nominal Dia(mm) | 8 | | | |
| Ball Dia(mm) | 0.8 | | | |
| Lead(mm) | 1 | | | |
| B.C.D(mm) | 8.3 | | | |
| Thread Direction | Right Hand | | | |
| Circuits | 1 Return x 3 Circuits | | | |
| Accuracy | C5X | C5Y | C7Y | C7Z |
| Axial Backlash | 0 | < 0.005 | < 0.005 | < 0.01 |
| Dynamic Load Ca(N) | 700 | | | |
| Max. Static Load Coa(N) | 1420 | | | |

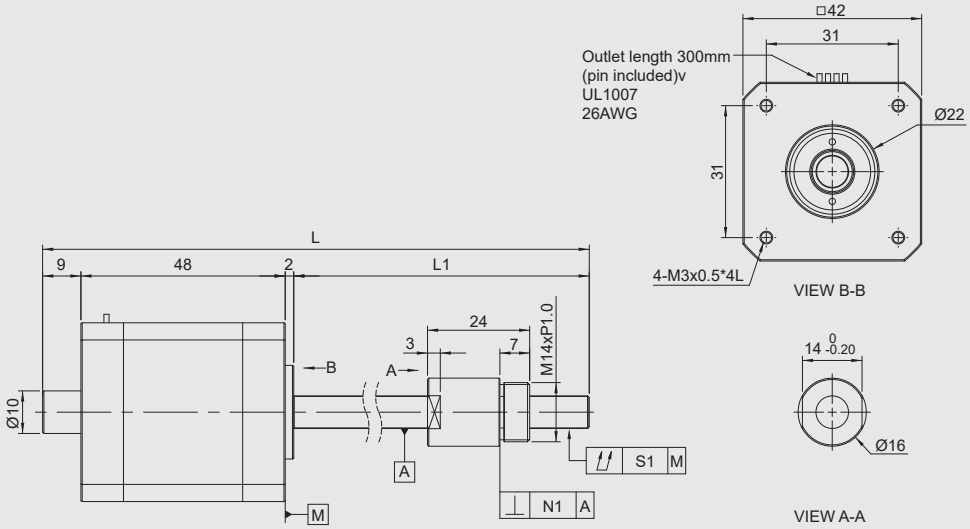


| Specification | Stroke | Shaft Length | | Cumulative Deviation Tolerance | Nut Verticality Tolerance | Lead Accuracy | |
|---|---|---|---|---|---|---|---|
| | | L1 | L | S1 | N1 | Mean Travel | Variation |
| GOOMS2P42Z-0801KS-RC5□-65R124-M | 40 | 65 | 124 | 0.035 | 0.01 | 0.018 | 0.018 |
| GOOMS2P42Z-0801KS-RC7□-65R124-M | | | | 0.045 | 0.014 | Travel Distance:±0.05/300 | |
| GOOMS2P42Z-0801KS-RC5□-95R154-M | 70 | 95 | 154 | 0.035 | 0.01 | 0.018 | 0.018 |
| GOOMS2P42Z-0801KS-RC7□-95R154-M | | | | 0.045 | 0.014 | Travel Distance:±0.05/300 | |
| GOOMS2P42Z-0801KS-RC5□-125R184-M | 100 | 125 | 184 | 0.035 | 0.01 | 0.02 | 0.018 |
| GOOMS2P42Z-0801KS-RC7□-125R184-M | | | | 0.045 | 0.014 | Travel Distance:±0.05/300 | |

| Motor | |
|---|---|
| Phase | 2 |
| Step Angle | 1.8˚±5%(Full step, unload) |
| Rated Voltage (V) | 4.4 |
| Current / Phase(A) | 0.8 |
| Resistor / Phase (Ω) | 5.5±10% |
| Inductor / Phase (mH) | 1.5±15% |
| Moment of Inertia (g·m²) | 50 |
| Holding Torque (mg·cm) | 450 |

Rotation Speed-Torque Characteristics

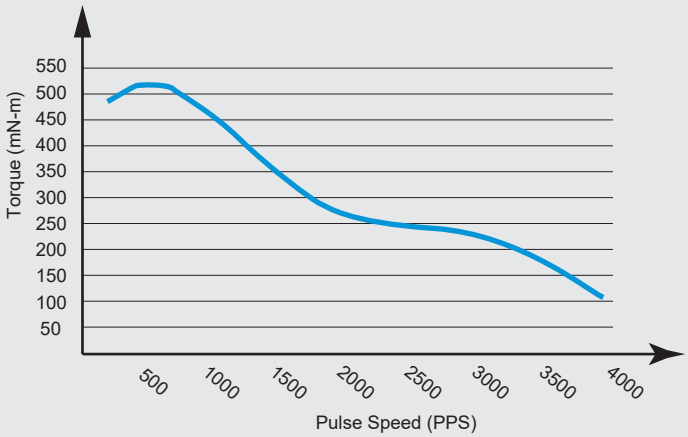


Wiring Diagram

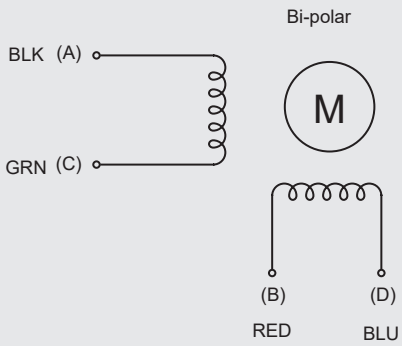

# GOOMS2P42Z-0802-F

| Rolled Ball Screw | | | | |
|---|---|---|---|---|
| Nominal Dia(mm) | 8 | | | |
| Ball Dia(mm) | 1.2 | | | |
| Lead(mm) | 2 | | | |
| B.C.D(mm) | 8.3 | | | |
| Thread Direction | Right Hand | | | |
| Circuits | 1 Return x 3 Circuits | | | |
| Accuracy | C5X | C5Y | C7Y | C7Z |
| Axial Backlash | 0 | < 0.005 | < 0.005 | < 0.01 |
| Dynamic Load Ca(N) | 1700 | | | |
| Max. Static Load Coa(N) | 3200 | | | |

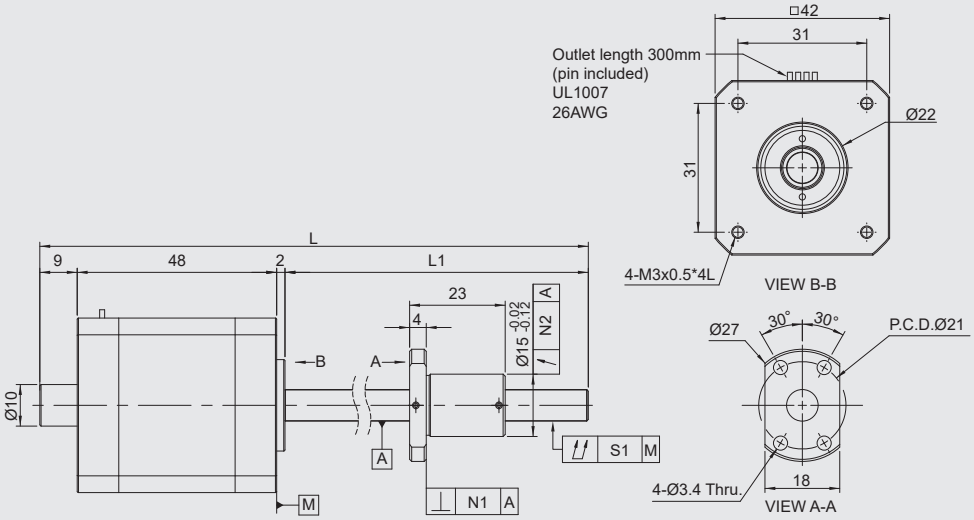


| Specification | Stroke | Shaft Length | | Cumulative Deviation Tolerance | Flanged Nut Verticality | Nut Deviation Tolerance | Lead Accuracy | |
|---|---|---|---|---|---|---|---|---|
| | | L1 | L | S1 | N1 | N2 | Mean Travel | Variation |
| GOOMS2P42Z-0802KS-RC5□-65R124-F | 40 | 65 | 124 | 0.035 | 0.01 | 0.012 | 0.018 | 0.018 |
| GOOMS2P42Z-0802KS-RC7□-65R124-F | | | | 0.045 | 0.014 | 0.02 | Travel Distance：±0.05/300 | |
| GOOMS2P42Z-0802KS-RC5□-95R154-F | 70 | 95 | 154 | 0.035 | 0.01 | 0.012 | 0.018 | 0.018 |
| GOOMS2P42Z-0802KS-RC7□-95R154-F | | | | 0.045 | 0.014 | 0.02 | Travel Distance：±0.05/300 | |
| GOOMS2P42Z-0802KS-RC5□-125R184-F | 100 | 125 | 184 | 0.035 | 0.01 | 0.012 | 0.02 | 0.018 |
| GOOMS2P42Z-0802KS-RC7□-125R184-F | | | | 0.045 | 0.014 | 0.02 | Travel Distance：±0.05/300 | |

| Motor | |
|---|---|
| Phase | 2 |
| Step Angle | 1.8°±5%(Full step, unload) |
| Rated Voltage (V) | 4.4 |
| Current / Phase(A) | 0.8 |
| Resistor / Phase (Ω) | 5.5±10% |
| Inductor / Phase (mH) | 1.5±15% |
| Moment of Inertia (g·m²) | 50 |
| Holding Torque (mg·cm) | 450 |

Rotation Speed-Torque Characteristics

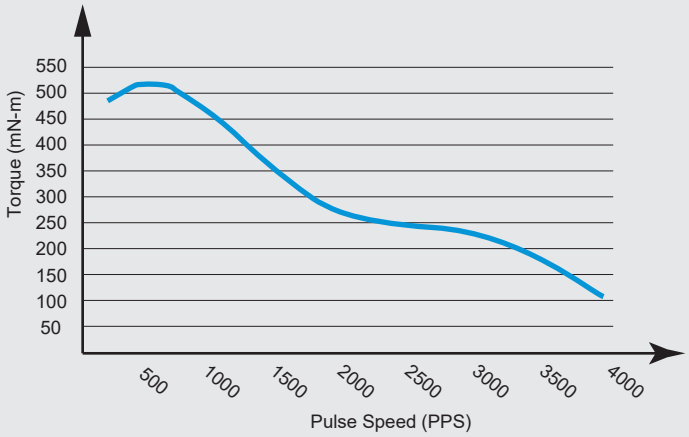


Wiring Diagram

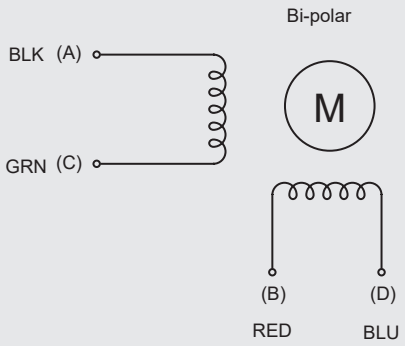

# GOOMS2P42Z-0802-H

| Rolled Ball Screw | | | | |
|---|---|---|---|---|
| Nominal Dia(mm) | 8 | | | |
| Ball Dia(mm) | 1.2 | | | |
| Lead(mm) | 2 | | | |
| B.C.D(mm) | 8.3 | | | |
| Thread Direction | Right Hand | | | |
| Circuits | 1 Return x 3 Circuits | | | |
| Accuracy | C5X | C5Y | C7Y | C7Z |
| Axial Backlash | 0 | < 0.005 | < 0.005 | < 0.01 |
| Dynamic Load Ca(N) | 1700 | | | |
| Max. Static Load Coa(N) | 3200 | | | |

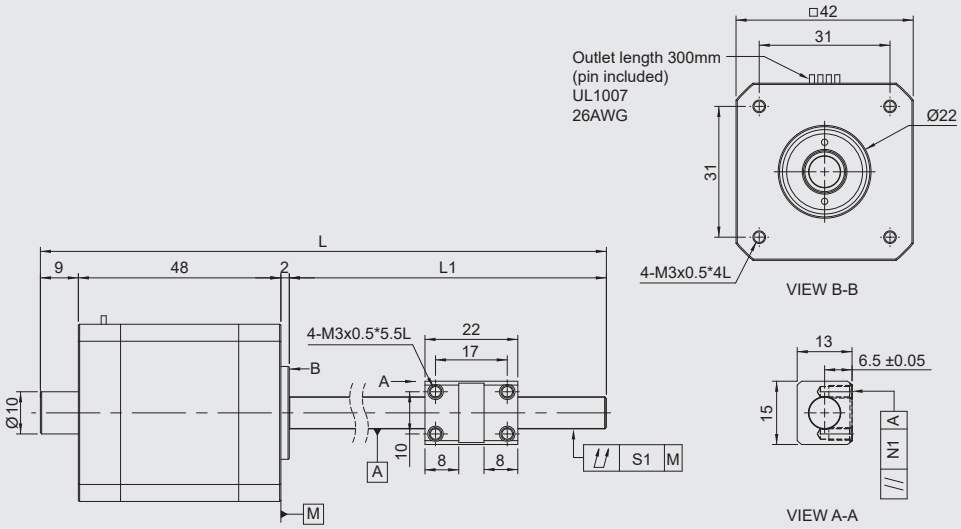


| Specification | Stroke | Shaft Length | | Cumulative Deviation Tolerance | Nut Parallelism Tolerance | Lead Accuracy | |
|---|---|---|---|---|---|---|---|
| | | L1 | L | S1 | N1 | Mean Travel | Variation |
| GOOMS2P42Z-0802KS-RC5□-65R124-H | 40 | 65 | 124 | 0.035 | 0.01 | 0.018 | 0.018 |
| GOOMS2P42Z-0802KS-RC7□-65R124-H | | | | 0.045 | 0.014 | Travel Distance：±0.05/300 | |
| GOOMS2P42Z-0802KS-RC5□-95R154-H | 70 | 95 | 154 | 0.035 | 0.01 | 0.018 | 0.018 |
| GOOMS2P42Z-0802KS-RC7□-95R154-H | | | | 0.045 | 0.014 | Travel Distance：±0.05/300 | |
| GOOMS2P42Z-0802KS-RC5□-125R184-H | 100 | 125 | 184 | 0.035 | 0.01 | 0.02 | 0.018 |
| GOOMS2P42Z-0802KS-RC7□-125R184-H | | | | 0.045 | 0.014 | Travel Distance：±0.05/300 | |

| Motor | |
|---|---|
| Phase | 2 |
| Step Angle | 1.8˚±5%(Full step, unload) |
| Rated Voltage (V) | 4.4 |
| Current / Phase(A) | 0.8 |
| Resistor / Phase (Ω) | 5.5±10% |
| Inductor / Phase (mH) | 1.5±15% |
| Moment of Inertia (g·m$^2$) | 50 |
| Holding Torque (mg·cm) | 450 |

Rotation Speed-Torque Characteristics

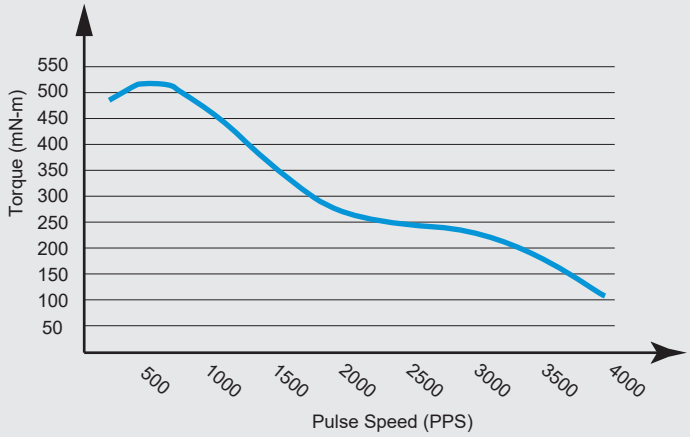


Wiring Diagram

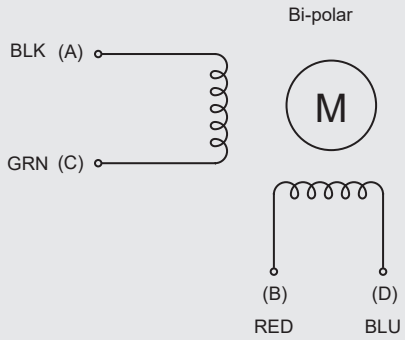

# GOOMS2P42Z-0802-M

| Rolled Ball Screw | | | | |
|---|---|---|---|---|
| Nominal Dia(mm) | 8 | | | |
| Ball Dia(mm) | 1.2 | | | |
| Lead(mm) | 2 | | | |
| B.C.D(mm) | 8.3 | | | |
| Thread Direction | Right Hand | | | |
| Circuits | 1 Return x 3 Circuits | | | |
| Accuracy | C5X | C5Y | C7Y | C7Z |
| Axial Backlash | 0 | < 0.005 | < 0.005 | < 0.01 |
| Dynamic Load Ca(N) | 1700 | | | |
| Max. Static Load Coa(N) | 3200 | | | |

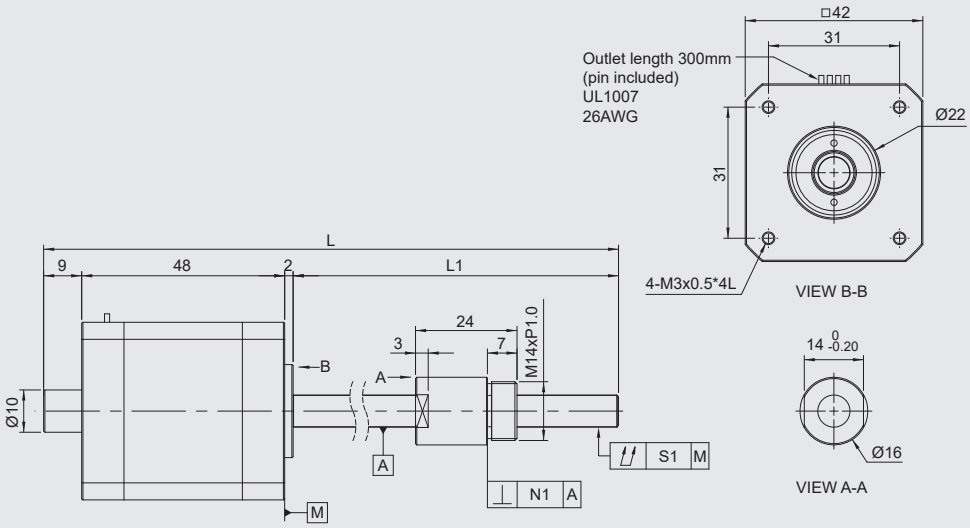


| Specification | Stroke | Shaft Length | | Cumulative Deviation Tolerance | Nut Verticality Tolerance | Lead Accuracy | |
|---|---|---|---|---|---|---|---|
| | | L1 | L | S1 | N1 | Mean Travel | Variation |
| GOOMS2P42Z-0802KS-RC5□-65R124-M | 40 | 65 | 124 | 0.035 | 0.01 | 0.018 | 0.018 |
| GOOMS2P42Z-0802KS-RC7□-65R124-M | | | | 0.045 | 0.014 | Travel Distance：±0.05/300 | |
| GOOMS2P42Z-0802KS-RC5□-95R154-M | 70 | 95 | 154 | 0.035 | 0.01 | 0.018 | 0.018 |
| GOOMS2P42Z-0802KS-RC7□-95R154-M | | | | 0.045 | 0.014 | Travel Distance：±0.05/300 | |
| GOOMS2P42Z-0802KS-RC5□-125R184-M | 100 | 125 | 184 | 0.035 | 0.01 | 0.02 | 0.018 |
| GOOMS2P42Z-0802KS-RC7□-125R184-M | | | | 0.045 | 0.014 | Travel Distance：±0.05/300 | |

| Motor | |
|---|---|
| Phase | 2 |
| Step Angle | 1.8°±5%(Full step, unload) |
| Rated Voltage (V) | 4.4 |
| Current / Phase(A) | 0.8 |
| Resistor / Phase (Ω) | 5.5±10% |
| Inductor / Phase (mH) | 1.5±15% |
| Moment of Inertia (g·m²) | 50 |
| Holding Torque (mg·cm) | 450 |

Rotation Speed-Torque Characteristics

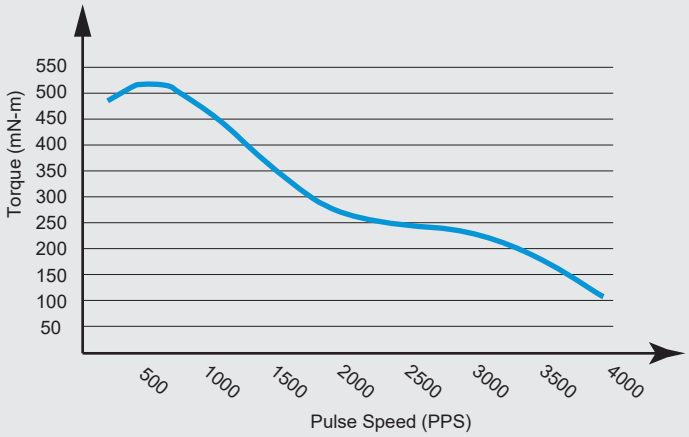


Wiring Diagram

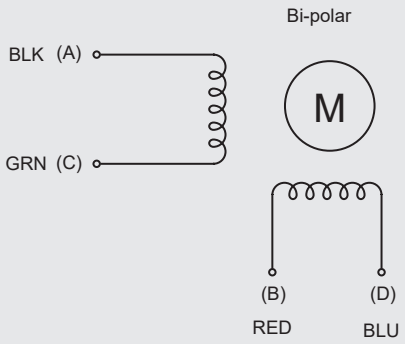

# Slide Rail Set / Table

## Model No. Introduction

# GOOR V - 03 - 75 - S - H

| Transmission Type | Rail Type | | Roller (Ball) Diameter (mm) | Rail Length (mm) | Corrosion resistance Material | Precision Level |
|---|---|---|---|---|---|---|
| GR | V-Rails | D-Rails | 03 | 75 | S | H |
| GOOR : Roller SUS304 Retainer | | | 00 : Ø1.0<br>01 : Ø1.5<br>02 : Ø2.0<br>03 : Ø3.0<br>04 : Ø4.0<br>06 : Ø6.0<br>09 : Ø9.0 | Length selection as specification table | S:SUS440C + Ni | P:Precision Grade<br>H:High Grade |
| GOOB : Ball SUS304 Retainer | | | | | | |
| GOOR : Roller POM Retainer | | | P - POM Retainer<br>01 : Ø1.5<br>02 : Ø2.0<br>03 : Ø3.0<br>04 : Ø4.0<br>06 : Ø6.0 | | | |

| Model No. | Material | | | |
|---|---|---|---|---|
| | Rail | Retainer | Roller | Ball |
| GOORV | SUJ2 | SUS304 | SUJ2 | X |
| GOORD | | | | |
| GOORV-S | SUS440C+Ni | SUS304 | SUS440C | X |
| GOORD-S | | | | |
| GOORVG-S | | Brass + Ni | | X |
| GOORVP | SUJ2 | POM | SUJ2 | |
| GOORDP | | | | X |
| GOORVG | | Brass | | |
| GOOBV | SUJ2 | Phosphor bronze (C5191) | X | SUJ2 |
| GOOBD | | | | |

GOORV-S; GOORD-S; GOORVG-S Series are antirust and corrosion resistant specification, and suitable for application to clean rooms.

◎Rails have been finished with cryogentic treatment (Refer to P.0451)

## Selection Procedure- Crossed Roller Slide Rail Set

1. Rolling element retainer selection upon load request：
2. Heavy duty → roller, light duty→ ball.
3. To decide "rolling element diameter"
4. Model type selected per installation way.
5. Specification confirmed.
6. Material selection per environment：
   SUJ2 or SUS440C.

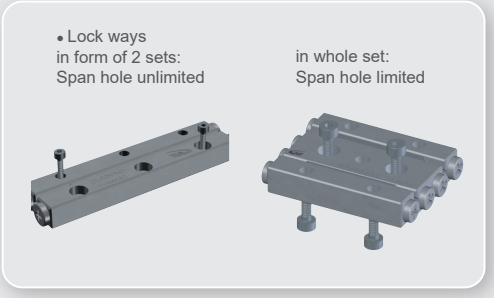


## GOOYII Crossed Roller Slide Rail Set

Composed of two pieces of stainless steel rails with V-grooves, been hardened and ground forming precisely, and rolling elements. Roller type moves in connective 90 degrees alternately to meet requirement of high parallelism and high flatness. In construction, rolling elements are transmitted in cross-contact by precise roller and V-grooves in rails, and in non circulation.Variation caused by friction resistance is little as well, even almost no difference between starting friction resistance and dynamic friction resistance in light duty. High accuracy moving and loading capacity could be performed.

◎Comparison of roller and ball character ( Refer to P.0209~P.0210)

## Crossed Roller Slide Rail Set Application

Widely applied to accuracy moving device in heavy duty or light duty, in variety of measuring instrument, Printed Circuit Board drilling machine…etc, or slide table used in Optical Measuring Instrument, Precise Gauge in Optical Experiment, precision fine tuning Optical Stage, Operation Mechanism, Survey Device, precise positioning, quantitative movement, X-ray Device & Micro-hole EDM.

## Lubrication

Linear motion needs effective lubrication. Abrasion increase of rolling elements and life decrease would be caused in running without lubrication.
Function of lubrication：
1.Reduce friction between running parts greatly, so that it could prevent lock and decrease abrasion.
2.Forming oilfilm on rolling surface to reduce abrasion of metal medium to extend life of rolling elements.
3.Covering on metal surface to prevent rust.

◎Relevant request of lubricant Compatibilty (Refer to P.0450)

# Roller Type

- GOORV / GOORD / GOORV-S / GOORD-S / GOORVP / GOORDP are composed of precise crossed rollers with hardened steel formed precisely to be V-grooves rail guides to create linear motion element in high accuracy.
- Limited stroke linear motion system with high rigidity, mid-hard load and spry moment.

## GOORV (GRV-S)

## GOORD (GRD-S)

## GOORVP

## GOORDP

## GOORV (GRV-S / GRVP)

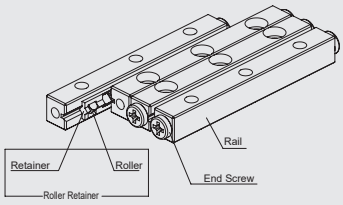


1 set =
4 rails + 2 roller retainers
+ 8 end screws

## GOORVG (GRVG-S)

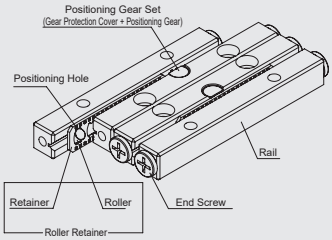


1 set =
4 rails + 2 roller retainers
+ 8 end screws

## GOORD (GRD-S / GRDP)

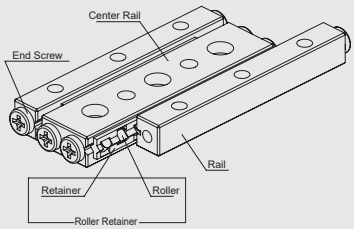


1 set =
1 center rail + 2 rails + 2 roller retainers
+ 8 end screws

Introduction of Crossed Roller Slide Rail Set



# Ball Type

- GOOBV&GOOBD are composed of ball retainer combined with precise ball arranged in smaller clearance, with the exclusive rails been heat treatment and cryogenic finish, then, forming precisely grinding V-grooves.
- Limited stroke linear motion system with low friction, light load and high accuracy.

## GOOBV

## GOOBD

## GOOBV

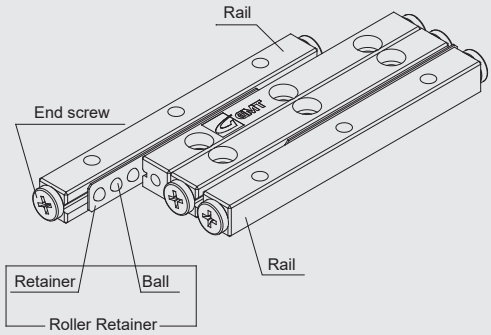


1 set =
4 rails + 2 ball retainers + 8 end screws

## GOOBD

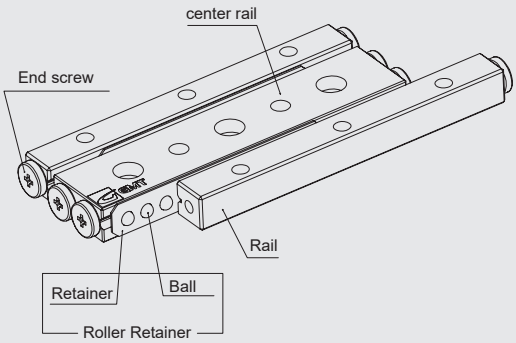


1 set =
1 center rail + 2 rails + 2 ball retainers + 8 end screws

Character & Accuracy

# Accuracy Specification

## Measure way

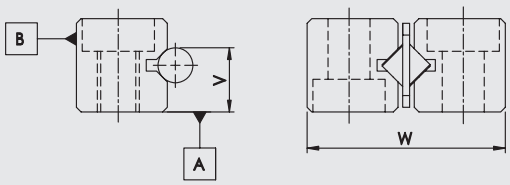


## Accuracy Level

| Item | Highleve | Precise Level |
|---|---|---|
| | H | P |
| Parallelism of rolling plane to A&B | As shown drawing | |
| Allowable dimension tolerance to Height V | ±0.02 | ±0.01 |
| Paired mutual tolerance to Height V | 0.01 | 0.005 |
| Allowable tolerance to Width W dimension | 0<br>-0.20 | 0<br>-0.10 |

## Straightness

| High-level(H) | | |
|---|---|---|
| Length(mm) | | Straightness (um) |
| Above | Below | |
| — | 50 | 2.0 |
| 50 | 100 | 2.0 |
| 100 | 160 | 3.0 |
| 160 | 310 | 3.0 |
| 310 | 510 | 4.0 |
| 510 | 600 | 4.0 |

( Ra 0.2 μm)

| Precise level(P) | | |
|---|---|---|
| Length(mm) | | Straightness (um) |
| Above | Below | |
| — | 50 | 1.0 |
| 50 | 100 | 1.0 |
| 100 | 160 | 2.0 |
| 160 | 310 | 2.0 |
| 310 | 510 | 3.0 |
| 510 | 600 | 3.0 |

( Ra 0.1 μm)

## Rail Length and Parallelism of Rolling Plane

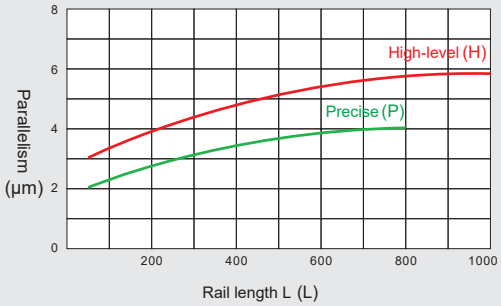


# Advantages

### Suited To Micro-Movement

Due to tiny friction resistance, and almost no difference between starting friction resistance and dynamic friction resistance. In case of tiny movement could also maintain correct trace perform high precision on the linear motion mechanism.

### Stability in Low Speed

Even in case of light loading, its variation of friction resistance is also tiny, so stability from low to high speed could be kept.

### High Rigidity, High Loading Capacity

Comparison of roller and ball, larger contact area, less elasticity deformation, and non-circulation, great number of units rotating effectively, so high rigidity and large load capacity.

### Low Noise

GOOYII Crossed Roller Slide Rail Set has no circulated rotating, no noise ocurred.Using roller slide way with roller retainer makes no noise caused by contact friction in between each rolling uint moves alternately, to ensure a quiet movement motion.

## Calculation of Stroke & Load &Roller Quantity



In selecting slide rail set, stroke length and roller quantity shall be taken into accout besides accuracy, load capacity and rated capacity.

### Maximum Stroke Length Calculation and Selection

(EX) In case of using cross roller side by side, which specification should be chosen?

Specification… …….GOORV04

Loading……..P=4000N

Stroke length……SW=120mm

SOL: Expected stroke length lower than 80% of rail stroke length, required stroke length could be calculated by formula as below.

$SW \leqq 0.8\ S$ S：Stroke length, mm

SW：Stroke length in use, mm

If SW=120mm $S \geq (1 / 0.8) \times 120=150$

As Rail shown in GOOYII catalog the maximum stroke would be 154mm, product model no. is GOORV04-200.

### Allowable Load Calculation

$F=2\ (Z / 2)\ FU$

Z：roller quantity

Z / 2：integer, no remainder

FU：Load capacity (N) for each roller （as catalog statistic)

SOL: Searched from catalog : Z=18 , FU = 390 , F = 2 ( 18 / 2 ) x 390 =7020 N

So allowed load F is bigger than loading P=4000 N

Load ratio =4000/7020*100=56.98%

It's mid-load to product spec, model no.GOORV04-200.

### Calculation of Retainer Length and Roller Quantity

Guide length is decided by stroke length and max. slide length, and calculation depends on end screws and stopper specification. Distance between two end rollers in the retainer is to have stroke length deduct half of max. stroke length.

$$L_R = L - \frac{S}{2}$$

$L_R$：rated distance between two rollers in ends of retainer mm

L：rail length mm

S：stroke length mm

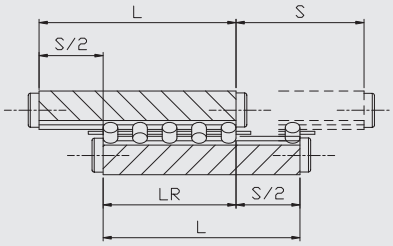

## Load Capacity of Ball Bearing

| Condition | Single-Axis Use | Single-Axis Vertical Use | Dual-Axes Abreast Use |
|---|---|---|---|
| Loading direction | 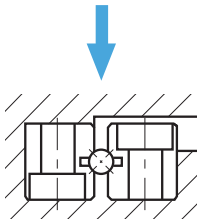 | 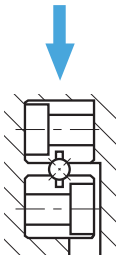 | 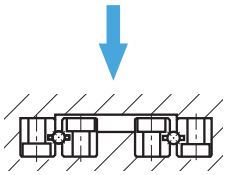 |
| Basic dynamic load rating ΣC | $B^{3/4} * \cos\frac{\pi}{4} * C$ | $B^{3/4} * 2^{7/9} * \cos\frac{\pi}{4} * C$ | |
| Basic static load rating ΣCo | $B * \cos\frac{\pi}{4} * Co$ | $B * 2^{7/9} * Co$ | |

C：basic dynamic load rating (N)　　Co：basic static load rating(N)

B：ball quantity in sigle row

## Load Capacity of Roller

| Condition | Single-Axis Use | Single-Axis Vertical Use | Dual-Axes Abreast Use |
|---|---|---|---|
| Loading direction | 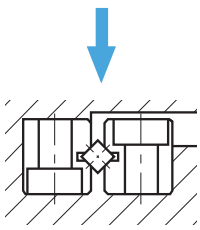 | | 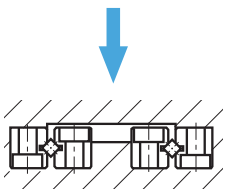 |
| Basic dynamic load rating ΣC | $C = (\frac{R}{2})^{3/4} * C$ | $C = (\frac{R}{2})^{3/4} * C * 2^{7/9}$ | |
| Basic static load rating ΣCo | $Co = \frac{R}{2} * Co$ | $Co = R * Co$ | |

C：Basic dynamic load rating (N)　　Co：Basic static load rating(N)

R：Roller quantity in sigle row　　R/2：Integer, no remainder

## Safety Factory Fd in Different Loading Direction

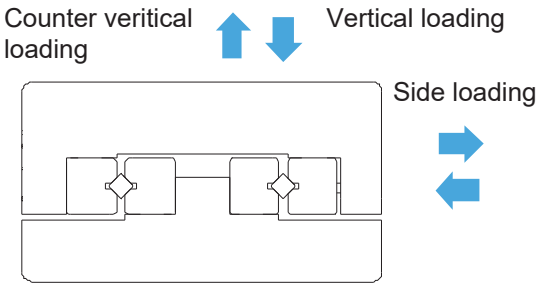


| Classification | Loading Direction | Fd |
|---|---|---|
| Basic Dynamic Loading | Vertical | 1.0 |
| | Side | 0.9 |
| | Counter vertical | 0.8 |
| Basic Static Loading | Vertical | 1.0 |
| | Side | 0.9 |
| | Counter vertical | 0.8 |

## Safety Factor Fv in Variable Loading

| Running Condition | Fv |
|---|---|
| Normal Running | 1~0.5 |
| Smooth Motion Required | 0.5~0.25 |
| Vibration, Shock | 0.3~0.2 |

Common contact factor Fc in single rail

| Quantity of Linear System Assembled in Single Shaft | Conact Factor Fc |
|---|---|
| 1 | 1.00 |
| 2 | 0.81 |
| 3 | 0.72 |
| 4 | 0.66 |
| 5 | 0.61 |

## Life Calculation

Ball

$$L=(F_d * F_v * \frac{\sum C}{P})^{10/3} * 50$$

Roller

$$L=(F_d * F_v * \frac{\sum C}{P})^{3} * 50$$

L： Usage life (km)　Fd：Safety factor in loading direction　P：Loading

Fv：Safety factor in variable direction

## Rail Stroke (S), Stroke in Use (Sw)

Stroke in use is less or equal to 80% of rail stroke　$Sw \leqq 0.8S$

## Rail Length (L)

Rail length shall be higher than 1.5 times to stroke length in use, or 1.2 times to rail stroke length.

$L \geqq 1.5Sw$　or　$L \geqq 1.2S$

## Assembly Way

**1** Lay oil in low viscosity on contact planes, fix rail (code①~③) with regular torque.

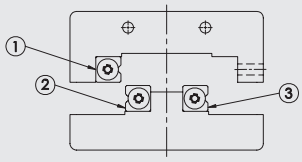


**2** Temporarily lock rail in adjusted side (code ④)

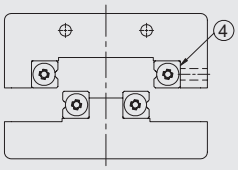


**3** Disassemble end screw from end of one side, and carefully insert roller retainer to nearby center of the rail.

(3-1) Lock the end screw again.

(3-2) Slowly move table back and forth to the rail end, and adjust roller retainer position to rail center.

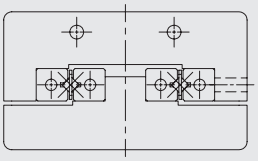

Install roller retainer

**4** Fix gauges both in center and side of the table (level plane)

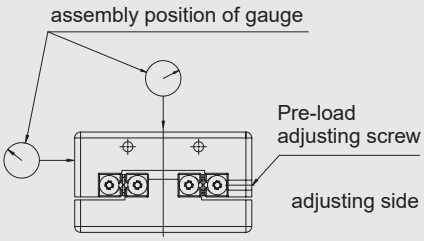


**5** Move table to end of one side, and lock pre-load adjusting screw slightly.

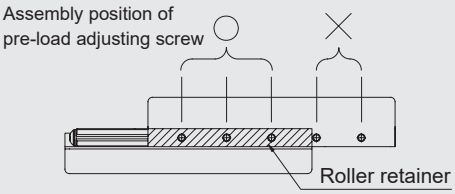


**6** Move table to the end of another side, as above description, and lock pre-load adjusting screw slightly.

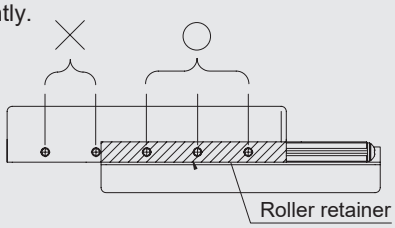


**7** Return table back to center and lock pre-loads adjusting screw slightly. Adjust clearance of table to zero. In case of clearance free, move table back and forth, and index change performance on the fixed gauge would be smallest. Notice that, last adjustment of preloading is to set correct torque value with torque wrench and prepare to lock rail fix screw.

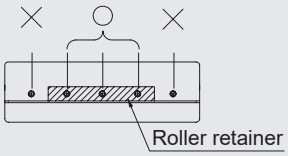


**8** Finally surely lock the rail (code ④). As steps of screw adjustment, move table back and forth, then have the table over roller retainer, and lock screws in order.

O：Loading on to pre-load adjusting screw.
x ：Loading off to pre-load adjusting screw.

## Installation Precaution & Application Examples

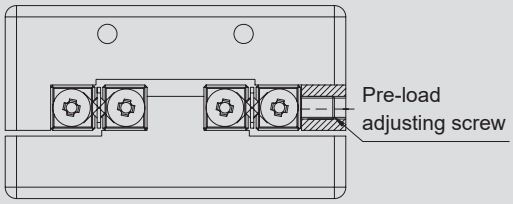


In regular situation, use pre-load adjusting screw to adjust pre-load.

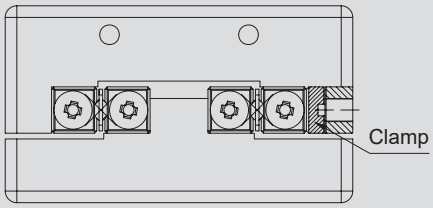


Use clamp to meet require of accuracy and rigidity.

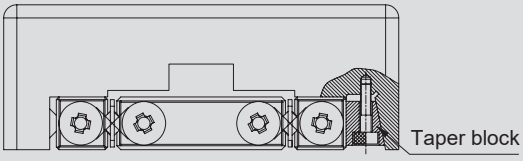


Use taper block to meet special requirement of high rigidity and high accuracy.

## Installation Precaution

- In order to let GOOYII Crossed Roller Slide Rail
  Set perform its excellent product function, it's recommended to install assembly planes with accuracy same as parallelism precisely processed in Crossed Roller Slide Rail Set.
- All burrs, dent, dust, miscellaneous objects on the rail of table and base need to be cleaned spotlessly and keep eyes on assembly operation application.
- Preload adjustment, too much preload would cause press damage to reduce life; it's normally recommended to use zero or tiny preload.

Accuracy of intallation assembly plane.

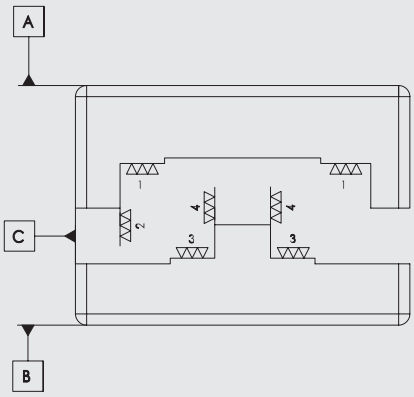

Recommendation

### Pre-Load Adjusting Screw Lock Torque (Unit/n˙m)

| Specification | Screw Size | Lock Torque |
|---|---|---|
| GOORV1 | M2 | 0.008 |
| GOORV2 | M3 | 0.012 |
| GOORV3 | M4 | 0.05 |
| GOORV4 | M4 | 0.08 |
| GOORV6 | M5 | 0.2 |
| GOORV9 | M6 | 0.4 |

### Fix Screw Lock Torque (Unit/n˙m)

| Specification | Lock Torque |
|---|---|
| M2 | 0.28 |
| M3 | 1.02 |
| M4 | 2.37 |
| M5 | 4.77 |
| M6 | 8.14 |
| M8 | 19.69 |

(Use steel alloy screw)

## Reserved Lock Screw

GOOYII Crossed Roller SlideRail Set, used in socket-head screw hole assembly, it's recommended to use reserved lock screw.

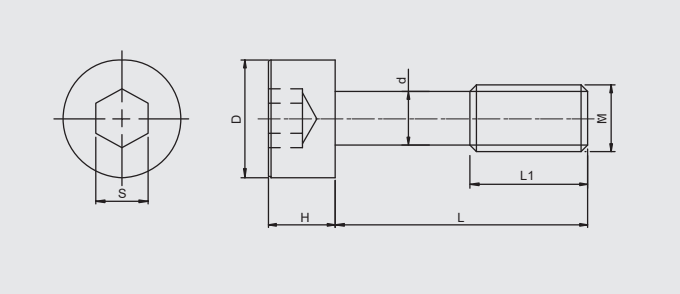


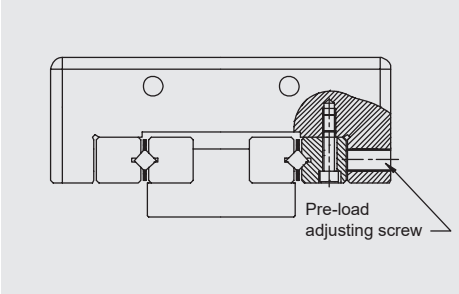


| M (mm) | d (mm) | D (mm) | H (mm) | L (mm) | L1 (mm) | S (mm) | Slide way |
|---|---|---|---|---|---|---|---|
| M3 | 2.3 | 5 | 3 | 12 | 5 | 2.5 | GOORV3 |
| M4 | 3.1 | 5.8 | 4 | 15 | 7 | 3 | GOORV4 |
| M5 | 3.9 | 8 | 5 | 20 | 8 | 4 | GOORV6 |
| M6 | 4.6 | 8.5 | 6 | 30 | 12 | 5 | GOORV9 |
| M8 | 6.25 | 11.3 | 8 | 40 | 17 | 6 | GOORV12 |

## Operation Precaution



| | |
|---|---|
| Adjustment | Operating under situations of improper accuracy of assembly plane & preloadadjustment, would cause running in low accuracy and slip-out to affect usage life. Notice more in adjustment. |
| Retainer Deviation | GOOYII Crossed Roller Slide Rail Set, in high speed or off-center load, vibration load, might cause retainer deviation. Please keep enough space for stroke design, and not to have over pre-load set. |
| End Screw | Ends of Crossed Roller Slide Rail Set are located with end screws, but this funtion is to prevent retainer falling off, instead of stopping mechanism. If requirement of stopping function, it's recommended to design reserved block mechanism. |
| Careful Operation | Any carelessness of falling off Crossed Roller Slide Rail Set or unusual collision and extruding, would appear identation made by contact of V-groove and rollers (ball), to cause non-smooth motion, affected accuracy. Please be more careful in operation. |
| Whole Set Match Principle | Crossed Roller Slide Rail Set accuracy is made by whole set as unit to precisely control it's error range.<br>Different sets of slide rail set mixed in use may result in accuracy variation. Please notice more in assembling. |
| Locating Pin Hole | GOOYII Crossed Roller Slide Rail Set, application series - GOORD&-GOOBD series, locating pin hole processing needs<br>to fix center rail on the plane, and drilling process.<br>Be sure to clean all cutting bits out, and washing if necessary after pin hole process.<br> 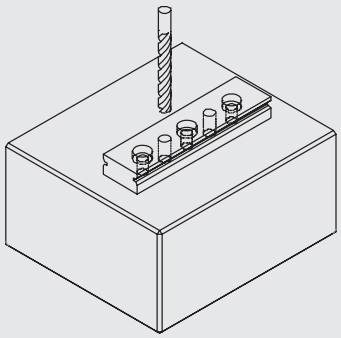 <br>Locating pin hole processing |

## Introduction of Crossed Roller Slide Rail Set

# Product Specification Silde Rail Set

## GOORV / GOORV - S

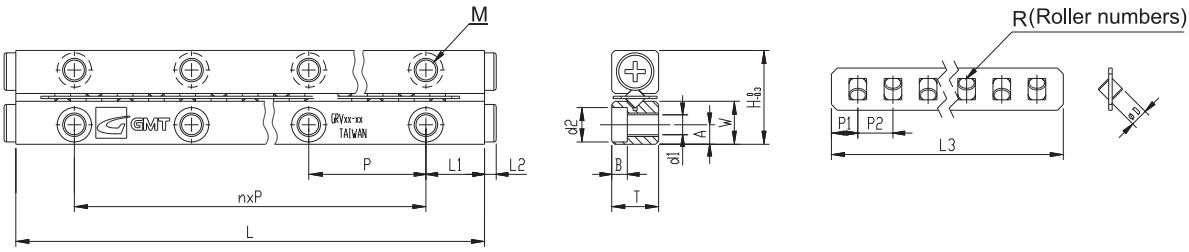


## Specification

| Model No. | | Max. Stroke (mm) | Main Dimensions (mm) | | | | | | | Retainer Dimensions (mm) | | | | |
|---|---|---|---|---|---|---|---|---|---|---|---|---|---|---|
| Standard | Antirust | | H | T | W | L | n*p | L1 | L2 | ØD | L3 | R | P1 | P2 |
| GOORV00-20 | GOORV00-20-S | 17 | 6.2 | 3 | 2.9 | 20 | 1*10 | 5 | 0.7 | Ø1 | 12.4 | 6 | 1.3 | 2 |
| GOORV00-30 | GOORV00-30-S | 21 | | | | 30 | 2*10 | | | | 16.4 | 8 | | |
| GOORV00-40 | GOORV00-40-S | 25 | | | | 40 | 3*10 | | | | 20.4 | 10 | | |
| GOORV00-50 | GOORV00-50-S | 29 | | | | 50 | 4*10 | | | | 24.4 | 12 | | |
| GOORV00-60 | GOORV00-60-S | 33 | | | | 60 | 5*10 | | | | 28.4 | 14 | | |
| GOORV00-70 | GOORV00-70-S | 37 | | | | 70 | 6*10 | | | | 32.4 | 16 | | |
| GOORV00-80 | GOORV00-80-S | 41 | | | | 80 | 7*10 | | | | 36.4 | 18 | | |
| GOORV01-20 | GOORV01-20-S | 13 | 8.5 | 4 | 3.9 | 20 | 1*10 | 5 | 1.3 | Ø1.5 | 15.8 | 5 | 1.9 | 3 |
| GOORV01-30 | GOORV01-30-S | 21 | | | | 30 | 2*10 | | | | 21.8 | 7 | | |
| GOORV01-40 | GOORV01-40-S | 29 | | | | 40 | 3*10 | | | | 27.8 | 9 | | |
| GOORV01-50 | GOORV01-50-S | 37 | | | | 50 | 4*10 | | | | 33.8 | 11 | | |
| GOORV01-60 | GOORV01-60-S | 45 | | | | 60 | 5*10 | | | | 39.8 | 13 | | |
| GOORV01-70 | GOORV01-70-S | 53 | | | | 70 | 6*10 | | | | 45.8 | 15 | | |
| GOORV01-80 | GOORV01-80-S | 61 | | | | 80 | 7*10 | | | | 51.8 | 17 | | |
| GOORV02-30 | GOORV02-30-S | 24 | 12 | 6 | 5.5 | 30 | 1*15 | 7.5 | 1.5 | Ø2 | 21.6 | 5 | 2.8 | 4 |
| GOORV02-45 | GOORV02-45-S | 30 | | | | 45 | 2*15 | | | | 33.6 | 8 | | |
| GOORV02-60 | GOORV02-60-S | 44 | | | | 60 | 3*15 | | | | 41.6 | 10 | | |
| GOORV02-75 | GOORV02-75-S | 58 | | | | 75 | 4*15 | | | | 49.6 | 12 | | |
| GOORV02-90 | GOORV02-90-S | 72 | | | | 90 | 5*15 | | | | 57.6 | 14 | | |
| GOORV02-105 | GOORV02-105-S | 86 | | | | 105 | 6*15 | | | | 65.6 | 16 | | |
| GOORV02-120 | GOORV02-120-S | 100 | | | | 120 | 7*15 | | | | 73.6 | 18 | | |
| GOORV02-135 | GOORV02-135-S | 106 | | | | 135 | 8*15 | | | | 85.6 | 21 | | |
| GOORV02-150 | GOORV02-150-S | 120 | | | | 150 | 9*15 | | | | 93.6 | 23 | | |
| GOORV02-165 | GOORV02-165-S | 134 | | | | 165 | 10*15 | | | | 101.6 | 25 | | |
| GOORV02-180 | GOORV02-180-S | 148 | | | | 180 | 11*15 | | | | 109.6 | 27 | | |

| Ordering Example : | GOOR | - | V | - | 01 | - | 40 | - | S | - | P |
|---|---|---|---|---|---|---|---|---|---|---|---|
| | Roller | | V rail | | Roller dia. | | Rail length | | Antirust | | Precision Level |

GOORV / GOORV - S

## Material Specification

| Component / Material / Model No. | Rail | Roller | Retainer |
|---|---|---|---|
| GOORV | SUJ2 | | SUS304 |
| GOORV - S | SUS440C +Ni | SUS440C | |

GOORV - S No Surface finished to V-groove surface of the rail.

| Mounting Dimensions (mm) | | | | | Load Per Roller | | | Weight (g) / 2 Pieces | |
|---|---|---|---|---|---|---|---|---|---|
| A | M | d1 | d2 | B | Basic Dynamic Load Rating (C) | Basic Static Load Rating (Co) | Allowable Load (Fu) | Standard | Antirust |
| 1.2 | M1.4 | 1.1 | 2.1 | 4 | 62N/1pcs | 72N/1pcs | 24N/1pcs | 2.4 | 2.6 |
| | | | | | | | | 3.5 | 3.8 |
| | | | | | | | | 4.6 | 5 |
| | | | | | | | | 5.7 | 6.2 |
| | | | | | | | | 6.8 | 7.4 |
| | | | | | | | | 7.9 | 8.6 |
| | | | | | | | | 9 | 9.8 |
| 1.8 | M2 | 1.65 | 3 | 1.4 | 125N/1pcs | 144N/1pcs | 48N/1pcs | 4 | 4 |
| | | | | | | | | 6 | 7 |
| | | | | | | | | 8 | 9 |
| | | | | | | | | 10 | 11 |
| | | | | | | | | 12 | 13 |
| | | | | | | | | 14 | 16 |
| | | | | | | | | 16 | 17 |
| 2.5 | M3 | 2.55 | 4.4 | 2 | 293N/1pcs | 292N/1pcs | 97N/1pcs | 13 | 14 |
| | | | | | | | | 20 | 21 |
| | | | | | | | | 26 | 28 |
| | | | | | | | | 32 | 35 |
| | | | | | | | | 39 | 42 |
| | | | | | | | | 45 | 48 |
| | | | | | | | | 51 | 55 |
| | | | | | | | | 58 | 62 |
| | | | | | | | | 64 | 69 |
| | | | | | | | | 70 | 76 |
| | | | | | | | | 77 | 82 |

## GOORV / GOORV - S

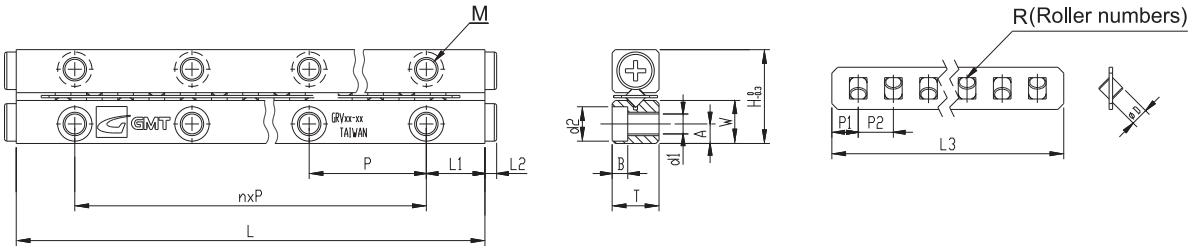


## Specification

| Model No. | | Max. Stroke (mm) | Main Dimensions (mm) | | | | | | | Retainer Dimensions (mm) | | | | |
|---|---|---|---|---|---|---|---|---|---|---|---|---|---|---|
| Standard | Antirust | | H | T | W | L | n*p | L1 | L2 | ØD | L3 | R | P1 | P2 |
| GOORV03-50 | GOORV03-50-S | 34 | | | | 50 | 1*25 | | | | 36.4 | 7 | | |
| GOORV03-75 | GOORV03-75-S | 54 | | | | 75 | 2*25 | | | | 51.4 | 10 | | |
| GOORV03-100 | GOORV03-100-S | 74 | | | | 100 | 3*25 | | | | 66.4 | 13 | | |
| GOORV03-125 | GOORV03-125-S | 104 | | | | 125 | 4*25 | | | | 76.4 | 15 | | |
| GOORV03-150 | GOORV03-150-S | 124 | | | | 150 | 5*25 | | | | 91.4 | 18 | | |
| GOORV03-175 | GOORV03-175-S | 144 | 18 | 8 | 8.3 | 175 | 6*25 | 12.5 | 2 | Ø3 | 106.4 | 21 | 3.2 | 5 |
| GOORV03-200 | GOORV03-200-S | 164 | | | | 200 | 7*25 | | | | 121.4 | 24 | | |
| GOORV03-225 | GOORV03-225-S | 184 | | | | 225 | 8*25 | | | | 136.4 | 27 | | |
| GOORV03-250 | GOORV03-250-S | 204 | | | | 250 | 9*25 | | | | 151.4 | 30 | | |
| GOORV03-275 | GOORV03-275-S | 224 | | | | 275 | 10*25 | | | | 166.4 | 33 | | |
| GOORV03-300 | GOORV03-300-S | 244 | | | | 300 | 11*25 | | | | 181.4 | 36 | | |
| GOORV04-80 | GOORV04-80-S | 54 | | | | 80 | 1*40 | | | | 57.6 | 8 | | |
| GOORV04-120 | GOORV04-120-S | 92 | | | | 120 | 2*40 | | | | 78.6 | 11 | | |
| GOORV04-160 | GOORV04-160-S | 130 | | | | 160 | 3*40 | | | | 99.6 | 14 | | |
| GOORV04-200 | GOORV04-200-S | 154 | | | | 200 | 4*40 | | | | 127.6 | 18 | | |
| GOORV04-240 | GOORV04-240-S | 192 | | | | 240 | 5*40 | | | | 148.6 | 21 | | |
| GOORV04-280 | GOORV04-280-S | 230 | 22 | 11 | 10 | 280 | 6*40 | 20 | 2 | Ø4 | 169.6 | 24 | 4.3 | 7 |
| GOORV04-320 | GOORV04-320-S | 254 | | | | 320 | 7*40 | | | | 197.6 | 28 | | |
| GOORV04-360 | GOORV04-360-S | 292 | | | | 360 | 8*40 | | | | 218.6 | 31 | | |
| GOORV04-400 | GOORV04-400-S | 330 | | | | 400 | 9*40 | | | | 239.6 | 34 | | |
| GOORV04-440 | GOORV04-440-S | 354 | | | | 440 | 10*40 | | | | 267.6 | 38 | | |
| GOORV04-480 | GOORV04-480-S | 392 | | | | 480 | 11*40 | | | | 288.6 | 41 | | |

| Ordering Example : | GOOR | - | V | - | 03 | - | 75 | - | S | - | P |
|---|---|---|---|---|---|---|---|---|---|---|---|
| | Roller | | V rail | | Roller dia. | | Rail length | | Antirust | | Precision Level |

GOORV / GOORV - S

## Material Specification

| Material / Component / Model No. | Rail | Roller | Retainer |
|---|---|---|---|
| GOORV | SUJ2 | | SUS304 |
| GOORV - S | SUS440C +Ni | SUS440C | |

GOORV - S No Surface finished to V-groove surface of the rail.

| Mounting Dimensions (mm) | | | | | Load Per Roller | | | Weight (g) / 2 Pieces | |
|---|---|---|---|---|---|---|---|---|---|
| A | M | d1 | d2 | B | Basic Dynamic Load Rating (C) | Basic Static Load Rating (Co) | Allowable Load (Fu) | Standard | Antirust |
| 3.5 | M4 | 3.3 | 6 | 3.1 | 638N/1pcs | 761N/1pcs | 254N/1pcs | 46 | 49 |
| | | | | | | | | 68 | 73 |
| | | | | | | | | 90 | 97 |
| | | | | | | | | 112 | 120 |
| | | | | | | | | 134 | 144 |
| | | | | | | | | 157 | 168 |
| | | | | | | | | 179 | 191 |
| | | | | | | | | 201 | 215 |
| | | | | | | | | 223 | 239 |
| | | | | | | | | 245 | 262 |
| | | | | | | | | 267 | 286 |
| 4.5 | M5 | 4.3 | 7.5 | 4.1 | 1230N/1pcs | 1170N/1pcs | 390N/1pcs | 122 | 130 |
| | | | | | | | | 180 | 193 |
| | | | | | | | | 238 | 254 |
| | | | | | | | | 296 | 317 |
| | | | | | | | | 355 | 380 |
| | | | | | | | | 413 | 442 |
| | | | | | | | | 472 | 505 |
| | | | | | | | | 530 | 568 |
| | | | | | | | | 589 | 631 |
| | | | | | | | | 647 | 694 |
| | | | | | | | | 706 | 756 |

## GOORV / GOORV - S

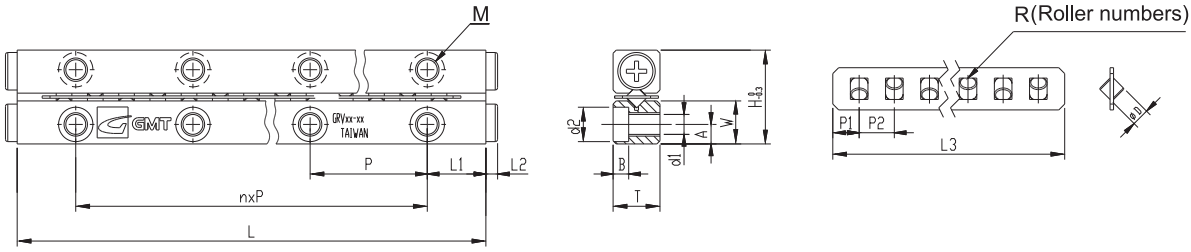


## Specification

| Model No. | | Max. Stroke (mm) | Main Dimensions (mm) | | | | | | | Retainer Dimensions (mm) | | | | |
|---|---|---|---|---|---|---|---|---|---|---|---|---|---|---|
| Standard | Antirust | | H | T | W | L | n*p | L1 | L2 | ØD | L3 | R | P1 | P2 |
| GOORV06-100 | GOORV06-100-S | 80 | 31 | 15 | 14 | 100 | 1*50 | 25 | 2 | Ø6 | 64.8 | 7 | 5.4 | 9 |
| GOORV06-150 | GOORV06-150-S | 108 | | | | 150 | 2*50 | | | | 100.8 | 11 | | |
| GOORV06-200 | GOORV06-200-S | 154 | | | | 200 | 3*50 | | | | 127.8 | 14 | | |
| GOORV06-250 | GOORV06-250-S | 200 | | | | 250 | 4*50 | | | | 154.8 | 17 | | |
| GOORV06-300 | GOORV06-300-S | 246 | | | | 300 | 5*50 | | | | 181.8 | 20 | | |
| GOORV06-350 | GOORV06-350-S | 274 | | | | 350 | 6*50 | | | | 217.8 | 24 | | |
| GOORV06-400 | GOORV06-400-S | 320 | | | | 400 | 7*50 | | | | 244.8 | 27 | | |
| GOORV06-450 | GOORV06-450-S | 366 | | | | 450 | 8*50 | | | | 271.8 | 30 | | |
| GOORV06-500 | GOORV06-500-S | 412 | | | | 500 | 9*50 | | | | 298.8 | 33 | | |
| GOORV06-550 | GOORV06-550-S | 458 | | | | 550 | 10*50 | | | | 325.8 | 36 | | |
| GOORV06-600 | GOORV06-600-S | 486 | | | | 600 | 11*50 | | | | 361.8 | 40 | | |
| GOORV09-200 | / | 158 | 44 | 22 | 20.2 | 200 | 1*100 | 50 | 3.5 | Ø9 | 130.0 | 9 | 9 | 14 |
| GOORV09-300 | / | 246 | | | | 300 | 2*100 | | | | 186.0 | 13 | | |
| GOORV09-400 | / | 306 | | | | 400 | 3*100 | | | | 256.0 | 18 | | |
| GOORV09-500 | / | 394 | | | | 500 | 4*100 | | | | 312.0 | 22 | | |
| GOORV09-600 | / | 482 | | | | 600 | 5*100 | | | | 368.0 | 26 | | |
| GOORV09-700 | / | 570 | | | | 700 | 6*100 | | | | 424.0 | 30 | | |
| GOORV09-800 | / | 658 | | | | 800 | 7*100 | | | | 480.0 | 34 | | |
| GOORV09-900 | / | 746 | | | | 900 | 8*100 | | | | 536.0 | 38 | | |
| GOORV09-1000 | / | 806 | | | | 1000 | 9*100 | | | | 606.0 | 43 | | |
| GOORV09-1100 | / | 894 | | | | 1100 | 10*100 | | | | 662.0 | 47 | | |
| GOORV09-1200 | / | 982 | | | | 1200 | 11*100 | | | | 718.0 | 51 | | |
| GOORV12-200 | / | 160 | 58 | 28 | 26.9 | 200 | 1*100 | 50 | 3.5 | Ø12 | 130.0 | 7 | 11 | 18 |
| GOORV12-300 | / | 216 | | | | 300 | 2*100 | | | | 202.0 | 11 | | |
| GOORV12-400 | / | 308 | | | | 400 | 3*100 | | | | 256.0 | 14 | | |
| GOORV12-500 | / | 400 | | | | 500 | 4*100 | | | | 310.0 | 17 | | |
| GOORV12-600 | / | 492 | | | | 600 | 5*100 | | | | 364.0 | 20 | | |
| GOORV12-700 | / | 548 | | | | 700 | 6*100 | | | | 436.0 | 24 | | |
| GOORV12-800 | / | 640 | | | | 800 | 7*100 | | | | 490.0 | 27 | | |
| GOORV12-900 | / | 732 | | | | 900 | 8*100 | | | | 544.0 | 30 | | |
| GOORV12-1000 | / | 824 | | | | 1000 | 9*100 | | | | 598.0 | 33 | | |
| GOORV12-1100 | / | 916 | | | | 1100 | 10*100 | | | | 652.0 | 36 | | |
| GOORV12-1200 | / | 972 | | | | 1200 | 11*100 | | | | 724.0 | 40 | | |

| Ordering Example : | GOOR | - | V | - | 06 | - | 200 | - | S | - | P |
|---|---|---|---|---|---|---|---|---|---|---|---|
| | Roller | | V rail | | Roller dia. | | Rail length | | Antirust | | Precision Level |

GOORV / GOORV - S

## Material Specification

| Material / Component / Model No. | Rail | Roller | Retainer |
|---|---|---|---|
| GOORV | SUJ2 | | SUS304 |
| GOORV - S | SUS440C +Ni | SUS440C | |

GOORV - S No Surface finished to V-groove surface of the rail.

| Mounting Dimensions (mm) | | | | | Load Per Roller | | | Weight (g) / 2 Pieces | |
|---|---|---|---|---|---|---|---|---|---|
| A | M | d1 | d2 | B | Basic Dynamic Load Rating (C) | Basic Static Load Rating (Co) | Allowable Load (Fu) | Standard | Antirust |
| 6 | M6 | 5.3 | 9.5 | 5.2 | 2570N/1pcs | 2632N/1pcs | 877N/1pcs | 287 | 311 |
| | | | | | | | | 435 | 466 |
| | | | | | | | | 577 | 618 |
| | | | | | | | | 721 | 773 |
| | | | | | | | | 864 | 925 |
| | | | | | | | | 1006 | 1078 |
| | | | | | | | | 1150 | 1232 |
| | | | | | | | | 1292 | 1385 |
| | | | | | | | | 1436 | 1539 |
| | | | | | | | | 1579 | 1691 |
| | | | | | | | | 1273 | 1846 |
| 9 | M8 | 6.8 | 10.5 | 6.2 | 7190N/1pcs | 7274N/1pcs | 2425N/1pcs | 1267 | / |
| | | | | | | | | 1891 | / |
| | | | | | | | | 2509 | / |
| | | | | | | | | 3133 | / |
| | | | | | | | | 3756 | / |
| | | | | | | | | 4628.1 | / |
| | | | | | | | | 4915.2 | / |
| | | | | | | | | 5525.3 | / |
| | | | | | | | | 6140.9 | / |
| | | | | | | | | 6751.1 | / |
| | | | | | | | | 7361.2 | / |
| 12 | M10 | 8.5 | 13.5 | 8.2 | 14700N/1pcs | 13187N/1pcs | 4396N/1pcs | 2114 | / |
| | | | | | | | | 3161 | / |
| | | | | | | | | 4195 | / |
| | | | | | | | | 5242 | / |
| | | | | | | | | 6276 | / |
| | | | | | | | | 7734.8 | / |
| | | | | | | | | 8829.2 | / |
| | | | | | | | | 9261.2 | / |
| | | | | | | | | 10281.7 | / |
| | | | | | | | | 11302.3 | / |
| | | | | | | | | 12336.4 | / |

## GOORVP

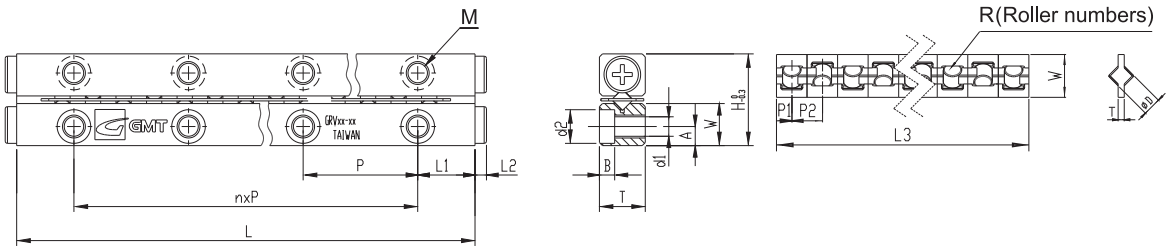


## Specification

| Model No. | Max. Stroke (mm) | Main Dimensions (mm) | | | | | | | Retainer Dimensions (mm) | | | | |
|---|---|---|---|---|---|---|---|---|---|---|---|---|---|
| Standard | | H | T | W | L | n*p | L1 | L2 | ØD | L3 | R | P1 | P2 |
| GOORVP01-20 | 8.4 | 8.5 | 4 | 3.9 | 20 | 1*10 | 5 | 1.3 | Ø1.5 | 15.8 | 5 | 1.9 | 3 |
| GOORVP01-30 | 16.4 | | | | 30 | 2*10 | | | | 21.8 | 7 | | |
| GOORVP01-40 | 24.4 | | | | 40 | 3*10 | | | | 27.8 | 9 | | |
| GOORVP01-50 | 32.4 | | | | 50 | 4*10 | | | | 33.8 | 11 | | |
| GOORVP01-60 | 40.4 | | | | 60 | 5*10 | | | | 39.8 | 13 | | |
| GOORVP01-70 | 48.4 | | | | 70 | 6*10 | | | | 45.8 | 15 | | |
| GOORVP01-80 | 56.4 | | | | 80 | 7*10 | | | | 51.8 | 17 | | |
| GOORVP02-30 | 16.8 | 12 | 6 | 5.5 | 30 | 1*15 | 7.5 | 1.5 | Ø2 | 21.6 | 5 | 2.8 | 4 |
| GOORVP02-45 | 22.8 | | | | 45 | 2*15 | | | | 33.6 | 8 | | |
| GOORVP02-60 | 36.8 | | | | 60 | 3*15 | | | | 41.6 | 10 | | |
| GOORVP02-75 | 50.8 | | | | 75 | 4*15 | | | | 49.6 | 12 | | |
| GOORVP02-90 | 64.8 | | | | 90 | 5*15 | | | | 57.6 | 14 | | |
| GOORVP02-105 | 78.8 | | | | 105 | 6*15 | | | | 65.6 | 16 | | |
| GOORVP02-120 | 92.8 | | | | 120 | 7*15 | | | | 73.6 | 18 | | |
| GOORVP02-135 | 98.8 | | | | 135 | 8*15 | | | | 85.6 | 21 | | |
| GOORVP02-150 | 112.8 | | | | 150 | 9*15 | | | | 93.6 | 23 | | |
| GOORVP02-165 | 126.8 | | | | 165 | 10*15 | | | | 101.6 | 25 | | |
| GOORVP02-180 | 140.8 | | | | 180 | 11*15 | | | | 109.6 | 27 | | |
| GOORVP03-50 | 27.2 | 18 | 8 | 8.3 | 50 | 1*25 | 12.5 | 2 | Ø3 | 36.4 | 7 | 3.2 | 5 |
| GOORVP03-75 | 47.2 | | | | 75 | 2*25 | | | | 51.4 | 10 | | |
| GOORVP03-100 | 67.2 | | | | 100 | 3*25 | | | | 66.4 | 13 | | |
| GOORVP03-125 | 97.2 | | | | 125 | 4*25 | | | | 76.4 | 15 | | |
| GOORVP03-150 | 117.2 | | | | 150 | 5*25 | | | | 91.4 | 18 | | |
| GOORVP03-175 | 137.2 | | | | 175 | 6*25 | | | | 106.4 | 21 | | |
| GOORVP03-200 | 157.2 | | | | 200 | 7*25 | | | | 121.4 | 24 | | |
| GOORVP03-225 | 177.2 | | | | 225 | 8*25 | | | | 136.4 | 27 | | |
| GOORVP03-250 | 197.2 | | | | 250 | 9*25 | | | | 151.4 | 30 | | |
| GOORVP03-275 | 217.2 | | | | 275 | 10*25 | | | | 166.4 | 33 | | |
| GOORVP03-300 | 237.2 | | | | 300 | 11*25 | | | | 181.4 | 36 | | |

| Ordering Example : | GOOR | - | V | - | P | - | 06 | - | 100 | - | P |
|---|---|---|---|---|---|---|---|---|---|---|---|
| | Roller | | V rail | | POM Retainer | | Roller dia. | | Rail length | | Precision Level |

GOORVP

## Material Specification

| Component / Material / Model No. | Rail | Roller | Retainer |
|---|---|---|---|
| GOORVP | SUJ2 | | POM |

| Mounting Dimensions (mm) | | | | | Load Per Roller | | | Weight (g) / 2 Pieces |
|---|---|---|---|---|---|---|---|---|
| A | M | d1 | d2 | B | Basic Dynamic Load Rating (C) | Basic Static Load Rating (Co) | Allowable Load (Fu) | Standard |
| 1.8 | M2 | 1.65 | 3 | 1.4 | 125N/1pcs | 144N/1pcs | 48N/1pcs | 4.0 |
| | | | | | | | | 6.0 |
| | | | | | | | | 8.0 |
| | | | | | | | | 10.0 |
| | | | | | | | | 12.0 |
| | | | | | | | | 14.0 |
| | | | | | | | | 16.0 |
| 2.5 | M3 | 2.55 | 4.4 | 2 | 293N/1pcs | 292N/1pcs | 97N/1pcs | 13.0 |
| | | | | | | | | 20.0 |
| | | | | | | | | 26.0 |
| | | | | | | | | 32.0 |
| | | | | | | | | 39.0 |
| | | | | | | | | 45.0 |
| | | | | | | | | 51.0 |
| | | | | | | | | 58.0 |
| | | | | | | | | 64.0 |
| | | | | | | | | 70.0 |
| | | | | | | | | 77.0 |
| 3.5 | M4 | 3.3 | 6 | 3.1 | 638N/1pcs | 761N/1pcs | 254N/1pcs | 46.0 |
| | | | | | | | | 68.0 |
| | | | | | | | | 90.0 |
| | | | | | | | | 112.0 |
| | | | | | | | | 134.0 |
| | | | | | | | | 157.0 |
| | | | | | | | | 179.0 |
| | | | | | | | | 201.0 |
| | | | | | | | | 223.0 |
| | | | | | | | | 245.0 |
| | | | | | | | | 267.0 |

## GOORVP

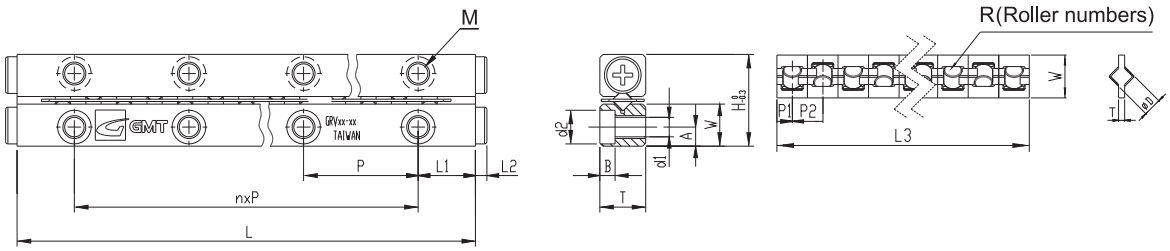


## Specification

| Model No. | Max. Stroke (mm) | Main Dimensions (mm) | | | | | | | Retainer Dimensions (mm) | | | | |
|---|---|---|---|---|---|---|---|---|---|---|---|---|---|
| Standard | | H | T | W | L | n*p | L1 | L2 | ØD | L3 | R | P1 | P2 |
| GOORVP04-80 | 44.8 | | | | 80 | 1*40 | | | | 57.6 | 8 | | |
| GOORVP04-120 | 82.8 | | | | 120 | 2*40 | | | | 78.6 | 11 | | |
| GOORVP04-160 | 120.8 | | | | 160 | 3*40 | | | | 99.6 | 14 | | |
| GOORVP04-200 | 144.8 | | | | 200 | 4*40 | | | | 127.6 | 18 | | |
| GOORVP04-240 | 182.8 | | | | 240 | 5*40 | | | | 148.6 | 21 | | |
| GOORVP04-280 | 220.8 | 22 | 11 | 10 | 280 | 6*40 | 20 | 2 | Ø4 | 169.6 | 24 | 4.3 | 7 |
| GOORVP04-320 | 244.8 | | | | 320 | 7*40 | | | | 197.6 | 28 | | |
| GOORVP04-360 | 282.8 | | | | 360 | 8*40 | | | | 218.6 | 31 | | |
| GOORVP04-400 | 320.8 | | | | 400 | 9*40 | | | | 239.6 | 34 | | |
| GOORVP04-440 | 344.8 | | | | 440 | 10*40 | | | | 267.6 | 38 | | |
| GOORVP04-480 | 382.8 | | | | 480 | 11*40 | | | | 288.6 | 41 | | |
| GOORVP06-100 | 70.4 | | | | 100 | 1*50 | | | | 64.8 | 7 | | |
| GOORVP06-150 | 98.4 | | | | 150 | 2*50 | | | | 100.8 | 11 | | |
| GOORVP06-200 | 144.4 | | | | 200 | 3*50 | | | | 127.8 | 14 | | |
| GOORVP06-250 | 190.4 | | | | 250 | 4*50 | | | | 154.8 | 17 | | |
| GOORVP06-300 | 236.4 | | | | 300 | 5*50 | | | | 181.8 | 20 | | |
| GOORVP06-350 | 264.4 | 31 | 15 | 14 | 350 | 6*50 | 25 | 2 | Ø6 | 217.8 | 24 | 5.4 | 9 |
| GOORVP06-400 | 310.4 | | | | 400 | 7*50 | | | | 244.8 | 27 | | |
| GOORVP06-450 | 356.4 | | | | 450 | 8*50 | | | | 271.8 | 30 | | |
| GOORVP06-500 | 402.4 | | | | 500 | 9*50 | | | | 298.8 | 33 | | |
| GOORVP06-550 | 448.4 | | | | 550 | 10*50 | | | | 325.8 | 36 | | |
| GOORVP06-600 | 476.4 | | | | 600 | 11*50 | | | | 361.8 | 40 | | |

| Ordering Example : | GOOR | - | V | - | P | - | 06 | - | 100 | - | P |
|---|---|---|---|---|---|---|---|---|---|---|---|
| | Roller | | V rail | | POM Retainer | | Roller dia. | | Rail length | | Precision Level |

## GOORVP

## Material Specification

| Component / Material / Model No. | Rail | Roller | Retainer |
|---|---|---|---|
| GOORVP | SUJ2 | | POM |

| Mounting Dimensions (mm) | | | | | Load Per Roller | | | Weight (g) / 2 Pieces |
|---|---|---|---|---|---|---|---|---|
| A | M | d1 | d2 | B | Basic Dynamic Load Rating (C) | Basic Static Load Rating (Co) | Allowable Load (Fu) | Standard |
| 4.5 | M5 | 4.3 | 7.5 | 4.1 | 1230N/1pcs | 1170N/1pcs | 390N/1pcs | 122 |
| | | | | | | | | 180 |
| | | | | | | | | 238 |
| | | | | | | | | 296 |
| | | | | | | | | 355 |
| | | | | | | | | 413 |
| | | | | | | | | 472 |
| | | | | | | | | 530 |
| | | | | | | | | 589 |
| | | | | | | | | 647 |
| | | | | | | | | 706 |
| 6 | M6 | 5.3 | 9.5 | 5.2 | 2570N/1pcs | 2632N/1pcs | 877N/1pcs | 287 |
| | | | | | | | | 435 |
| | | | | | | | | 577 |
| | | | | | | | | 721 |
| | | | | | | | | 864 |
| | | | | | | | | 1006 |
| | | | | | | | | 1150 |
| | | | | | | | | 1292 |
| | | | | | | | | 1436 |
| | | | | | | | | 1579 |
| | | | | | | | | 1273 |

## GOORD / GOORD - S

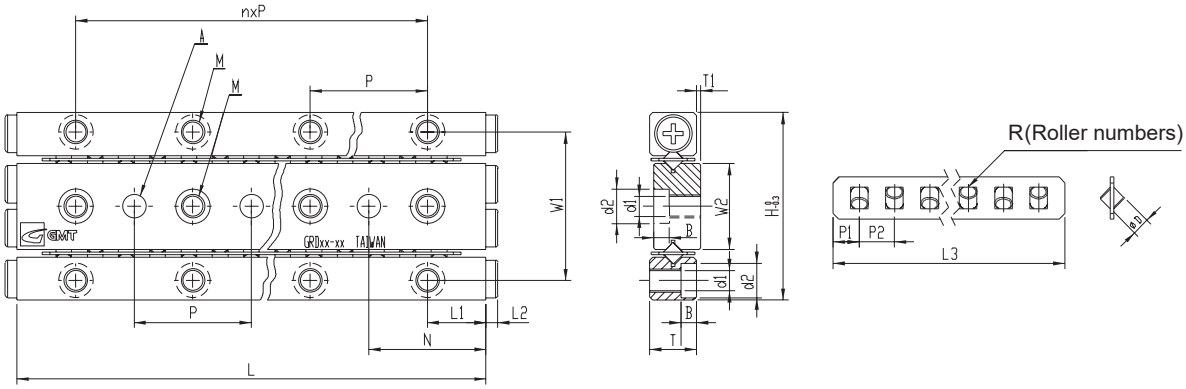


## Specification

| Model No. | | Max. Stroke (mm) | Main Dimensions (mm) | | | | | | | | | Retainer Dimensions (mm) | | | | |
|---|---|---|---|---|---|---|---|---|---|---|---|---|---|---|---|---|
| Standard | Antirust | | H | T | L | n*p | W1 | W2 | L1 | L2 | N | ØD | L3 | R | P1 | P2 |
| GOORD01-20 | GOORD01-20-S | 13 | | | 20 | 1*10 | | | | | | | 15.8 | 5 | | |
| GOORD01-30 | GOORD01-30-S | 21 | | | 30 | 2*10 | | | | | | | 21.8 | 7 | | |
| GOORD01-40 | GOORD01-40-S | 29 | | | 40 | 3*10 | | | | | | | 27.8 | 9 | | |
| GOORD01-50 | GOORD01-50-S | 37 | 17 | 4 | 50 | 4*10 | 13.4 | 7.8 | 5 | 1.3 | 10 | Ø1.5 | 33.8 | 11 | 1.9 | 3 |
| GOORD01-60 | GOORD01-60-S | 45 | | | 60 | 5*10 | | | | | | | 39.8 | 13 | | |
| GOORD01-70 | GOORD01-70-S | 53 | | | 70 | 6*10 | | | | | | | 45.8 | 15 | | |
| GOORD01-80 | GOORD01-80-S | 61 | | | 80 | 7*10 | | | | | | | 51.8 | 17 | | |
| GOORD02-30 | GOORD02-30-S | 24 | | | 30 | 1*15 | | | | | | | 21.6 | 5 | | |
| GOORD02-45 | GOORD02-45-S | 30 | | | 45 | 2*15 | | | | | | | 33.6 | 8 | | |
| GOORD02-60 | GOORD02-60-S | 44 | | | 60 | 3*15 | | | | | | | 41.6 | 10 | | |
| GOORD02-75 | GOORD02-75-S | 58 | | | 75 | 4*15 | | | | | | | 49.6 | 12 | | |
| GOORD02-90 | GOORD02-90-S | 72 | | | 90 | 5*15 | | | | | | | 57.6 | 14 | | |
| GOORD02-105 | GOORD02-105-S | 86 | 24 | 6 | 105 | 6*15 | 19 | 11 | 7.5 | 1.5 | 15 | Ø2 | 65.6 | 16 | 2.8 | 4 |
| GOORD02-120 | GOORD02-120-S | 100 | | | 120 | 7*15 | | | | | | | 73.6 | 18 | | |
| GOORD02-135 | GOORD02-135-S | 106 | | | 135 | 8*15 | | | | | | | 85.6 | 21 | | |
| GOORD02-150 | GOORD02-150-S | 120 | | | 150 | 9*15 | | | | | | | 93.6 | 23 | | |
| GOORD02-165 | GOORD02-165-S | 134 | | | 165 | 10*15 | | | | | | | 101.6 | 25 | | |
| GOORD02-180 | GOORD02-180-S | 148 | | | 180 | 11*15 | | | | | | | 109.6 | 27 | | |



| Ordering Example : | GOOR | - | D | - | 01 | - | 40 | - | S | - | P |
|---|---|---|---|---|---|---|---|---|---|---|---|
| | Roller | | D rail | | Roller dia. | | Rail length | | Antirust | | Precision Level |

GOORD / GOORD - S

## Material Specification

| Component / Material / Model No. | Rail | Roller | Retainer |
|---|---|---|---|
| GOORD | SUJ2 | | SUS304 |
| GOORD - S | SUS440C +Ni | SUS440C | |

GOORD-S No Surface finished to V-groove surface of the rail.

| Mounting Dimensions (mm) | | | | | | Load Rer Roller | | | Weight (g) / 2 Pieces | |
|---|---|---|---|---|---|---|---|---|---|---|
| T1 | M | d1 | d2 | A | B | Basic Dynamic Load Rating (C) | Basic Static Load Rating (Co) | Allowable Load (Fu) | Standard | Antirust |
| 0.5 | M2 | 1.65 | 3 | $2^{+0.010}_{0}$ | 1.4 | 125N/1pcs | 144N/1pcs | 48N/1pcs | 9 | 9 |
| | | | | | | | | | 13 | 13 |
| | | | | | | | | | 17 | 18 |
| | | | | | | | | | 20 | 22 |
| | | | | | | | | | 24 | 26 |
| | | | | | | | | | 29 | 31 |
| | | | | | | | | | 33 | 35 |
| 0.5 | M3 | 2.55 | 4.4 | $3^{+0.010}_{0}$ | 2 | 293N/1pcs | 292N/1pcs | 97N/1pcs | 27 | 29 |
| | | | | | | | | | 40 | 43 |
| | | | | | | | | | 53 | 57 |
| | | | | | | | | | 66 | 70 |
| | | | | | | | | | 78 | 84 |
| | | | | | | | | | 91 | 98 |
| | | | | | | | | | 104 | 111 |
| | | | | | | | | | 117 | 125 |
| | | | | | | | | | 130 | 139 |
| | | | | | | | | | 142 | 153 |
| | | | | | | | | | 155 | 166 |

## GOORD / GOORD - S

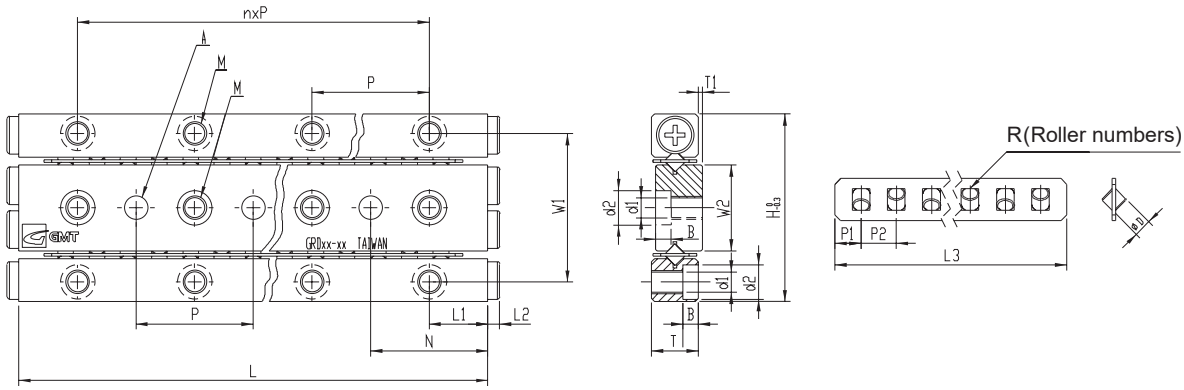


## Specification

| Model No. | | Max. Stroke (mm) | Main Dimensions (mm) | | | | | | | | | Retainer Dimensions (mm) | | | | |
|---|---|---|---|---|---|---|---|---|---|---|---|---|---|---|---|---|
| Standard | Antirust | | H | T | L | n*p | W1 | W2 | L1 | L2 | N | ØD | L3 | R | P1 | P2 |
| GOORD03-50 | GOORD03-50-S | 34 | 36 | 8 | 50 | 1*25 | 29 | 16.6 | 12.5 | 3 | 25 | Ø3 | 36.4 | 7 | 3.2 | 5 |
| GOORD03-75 | GOORD03-75-S | 54 | | | 75 | 2*25 | | | | | | | 51.4 | 10 | | |
| GOORD03-100 | GOORD03-100-S | 74 | | | 100 | 3*25 | | | | | | | 66.4 | 13 | | |
| GOORD03-125 | GOORD03-125-S | 104 | | | 125 | 4*25 | | | | | | | 76.4 | 15 | | |
| GOORD03-150 | GOORD03-150-S | 124 | | | 150 | 5*25 | | | | | | | 91.4 | 18 | | |
| GOORD03-175 | GOORD03-175-S | 144 | | | 175 | 6*25 | | | | | | | 106.4 | 21 | | |
| GOORD03-200 | GOORD03-200-S | 164 | | | 200 | 7*25 | | | | | | | 121.4 | 24 | | |
| GOORD03-225 | GOORD03-225-S | 184 | | | 225 | 8*25 | | | | | | | 136.4 | 27 | | |
| GOORD03-250 | GOORD03-250-S | 204 | | | 250 | 9*25 | | | | | | | 151.4 | 30 | | |
| GOORD03-275 | GOORD03-275-S | 224 | | | 275 | 10*25 | | | | | | | 166.4 | 33 | | |
| GOORD03-300 | GOORD03-300-S | 244 | | | 300 | 11*25 | | | | | | | 181.4 | 36 | | |
| GOORD04-80 | GOORD04-80-S | 54 | 44 | 11 | 80 | 1*40 | 35 | 20 | 20 | 2 | 40 | Ø4 | 57.6 | 8 | 4.3 | 7 |
| GOORD04-120 | GOORD04-120-S | 92 | | | 120 | 2*40 | | | | | | | 78.6 | 11 | | |
| GOORD04-160 | GOORD04-160-S | 130 | | | 160 | 3*40 | | | | | | | 99.6 | 14 | | |
| GOORD04-200 | GOORD04-200-S | 154 | | | 200 | 4*40 | | | | | | | 127.6 | 18 | | |
| GOORD04-240 | GOORD04-240-S | 192 | | | 240 | 5*40 | | | | | | | 148.6 | 21 | | |
| GOORD04-280 | GOORD04-280-S | 230 | | | 280 | 6*40 | | | | | | | 169.6 | 24 | | |
| GOORD04-320 | GOORD04-320-S | 254 | | | 320 | 7*40 | | | | | | | 197.6 | 28 | | |
| GOORD04-360 | GOORD04-360-S | 292 | | | 360 | 8*40 | | | | | | | 218.6 | 31 | | |
| GOORD04-400 | GOORD04-400-S | 330 | | | 400 | 9*40 | | | | | | | 239.6 | 34 | | |
| GOORD04-440 | GOORD04-440-S | 354 | | | 440 | 10*40 | | | | | | | 267.6 | 38 | | |
| GOORD04-480 | GOORD04-480-S | 392 | | | 480 | 11*40 | | | | | | | 288.6 | 41 | | |

| Ordering Example : | GOOR | - | D | - | 03 | - | 75 | - | S | - | P |
|---|---|---|---|---|---|---|---|---|---|---|---|
| | Roller | | D rail | | Roller dia. | | Rail length | | Antirust | | Precision Level |

GOORD / GOORD - S

## Material Specification

| Material / Component / Model No. | Rail | Roller | Retainer |
|---|---|---|---|
| GOORD | SUJ2 | | SUS304 |
| GOORD - S | SUS440C +Ni | SUS440C | |

GOORD-S No Surface finished to V-groove surface of the rail.

| Mounting Dimensions (mm) | | | | | | Load Per Roller | | | Weight (g) / 2 Pieces | |
|---|---|---|---|---|---|---|---|---|---|---|
| T1 | M | d1 | d2 | A | B | Basic Dynamic Load Rating (C) | Basic Static Load Rating (Co) | Allowable Load (Fu) | Standard | Antirust |
| 0.5 | M4 | 3.3 | 6 | $4^{+0.012}_{0}$ | 3.1 | 638N/1pcs | 761N/1pcs | 254N/1pcs | 94 | 101 |
| | | | | | | | | | 139 | 148 |
| | | | | | | | | | 183 | 196 |
| | | | | | | | | | 228 | 244 |
| | | | | | | | | | 273 | 292 |
| | | | | | | | | | 317 | 340 |
| | | | | | | | | | 362 | 387 |
| | | | | | | | | | 406 | 435 |
| | | | | | | | | | 451 | 483 |
| | | | | | | | | | 496 | 531 |
| | | | | | | | | | 540 | 579 |
| 0.5 | M5 | 4.3 | 7.5 | $5^{+0.012}_{0}$ | 4.1 | 1230N/1pcs | 1170N/1pcs | 390N/1pcs | 248 | 265 |
| | | | | | | | | | 366 | 392 |
| | | | | | | | | | 484 | 518 |
| | | | | | | | | | 602 | 645 |
| | | | | | | | | | 722 | 773 |
| | | | | | | | | | 840 | 900 |
| | | | | | | | | | 959 | 1028 |
| | | | | | | | | | 1079 | 1156 |
| | | | | | | | | | 1197 | 1283 |
| | | | | | | | | | 1316 | 1411 |
| | | | | | | | | | 1434 | 1538 |

## GOORDP

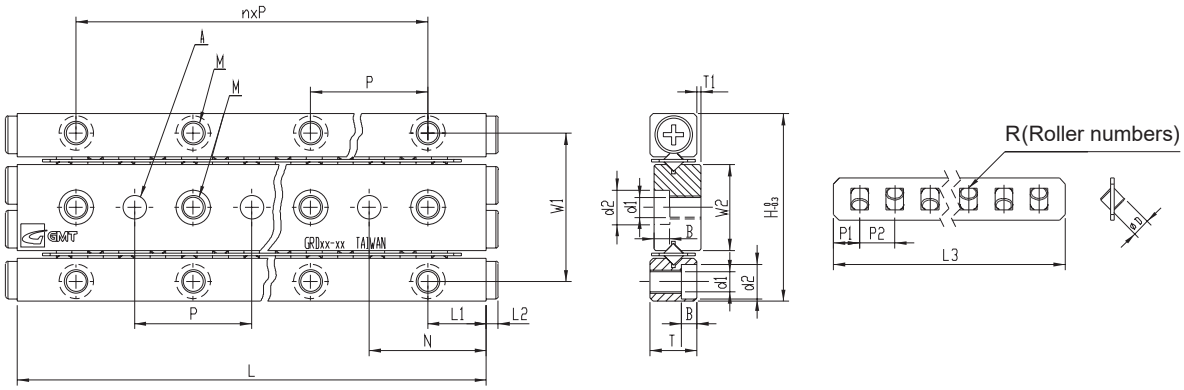


## Specification

| Model No. | Max. Stroke (mm) | Main Dimensions (mm) | | | | | | | | | Retainer Dimensions (mm) | | | | |
|---|---|---|---|---|---|---|---|---|---|---|---|---|---|---|---|
| Standard | | H | T | L | n*p | W1 | W2 | L1 | L2 | N | ØD | L3 | R | P1 | P2 |
| GOORDP01-20 | 13 | 17 | 4 | 20 | 1*10 | 13.4 | 7.8 | 5 | 1.3 | 10 | Ø1.5 | 15.8 | 5 | 1.9 | 3 |
| GOORDP01-30 | 21 | | | 30 | 2*10 | | | | | | | 21.8 | 7 | | |
| GOORDP01-40 | 29 | | | 40 | 3*10 | | | | | | | 27.8 | 9 | | |
| GOORDP01-50 | 37 | | | 50 | 4*10 | | | | | | | 33.8 | 11 | | |
| GOORDP01-60 | 45 | | | 60 | 5*10 | | | | | | | 39.8 | 13 | | |
| GOORDP01-70 | 53 | | | 70 | 6*10 | | | | | | | 45.8 | 15 | | |
| GOORDP01-80 | 61 | | | 80 | 7*10 | | | | | | | 51.8 | 17 | | |
| GOORDP02-30 | 24 | 24 | 6 | 30 | 1*15 | 19 | 11 | 7.5 | 1.5 | 15 | Ø2 | 21.6 | 5 | 2.8 | 4 |
| GOORDP02-45 | 30 | | | 45 | 2*15 | | | | | | | 33.6 | 8 | | |
| GOORDP02-60 | 44 | | | 60 | 3*15 | | | | | | | 41.6 | 10 | | |
| GOORDP02-75 | 58 | | | 75 | 4*15 | | | | | | | 49.6 | 12 | | |
| GOORDP02-90 | 72 | | | 90 | 5*15 | | | | | | | 57.6 | 14 | | |
| GOORDP02-105 | 86 | | | 105 | 6*15 | | | | | | | 65.6 | 16 | | |
| GOORDP02-120 | 100 | | | 120 | 7*15 | | | | | | | 73.6 | 18 | | |
| GOORDP02-135 | 106 | | | 135 | 8*15 | | | | | | | 85.6 | 21 | | |
| GOORDP02-150 | 120 | | | 150 | 9*15 | | | | | | | 93.6 | 23 | | |
| GOORDP02-165 | 134 | | | 165 | 10*15 | | | | | | | 101.6 | 25 | | |
| GOORDP02-180 | 148 | | | 180 | 11*15 | | | | | | | 109.6 | 27 | | |
| GOORDP03-50 | 34 | 36 | 8 | 50 | 1*25 | 29 | 16.6 | 12.5 | 2 | 2.5 | Ø3 | 36.4 | 7 | 3.2 | 5 |
| GOORDP03-75 | 54 | | | 75 | 2*25 | | | | | | | 51.4 | 10 | | |
| GOORDP03-100 | 74 | | | 100 | 3*25 | | | | | | | 66.4 | 13 | | |
| GOORDP03-125 | 104 | | | 125 | 4*25 | | | | | | | 76.4 | 15 | | |
| GOORDP03-150 | 124 | | | 150 | 5*25 | | | | | | | 91.4 | 18 | | |
| GOORDP03-175 | 144 | | | 175 | 6*25 | | | | | | | 106.4 | 21 | | |
| GOORDP03-200 | 164 | | | 200 | 7*25 | | | | | | | 121.4 | 24 | | |
| GOORDP03-225 | 184 | | | 225 | 8*25 | | | | | | | 136.4 | 27 | | |
| GOORDP03-250 | 204 | | | 250 | 9*25 | | | | | | | 151.4 | 30 | | |
| GOORDP03-275 | 224 | | | 275 | 10*25 | | | | | | | 166.4 | 33 | | |
| GOORDP03-300 | 244 | | | 300 | 11*25 | | | | | | | 181.4 | 36 | | |
| GOORDP04-80 | 54 | 44 | 11 | 80 | 1*40 | 35 | 20 | 20 | 2 | 40 | Ø4 | 57.6 | 8 | 4.3 | 7 |
| GOORDP04-120 | 92 | | | 120 | 2*40 | | | | | | | 78.6 | 11 | | |
| GOORDP04-160 | 130 | | | 160 | 3*40 | | | | | | | 99.6 | 14 | | |
| GOORDP04-200 | 154 | | | 200 | 4*40 | | | | | | | 127.6 | 18 | | |
| GOORDP04-240 | 192 | | | 240 | 5*40 | | | | | | | 148.6 | 21 | | |
| GOORDP04-280 | 230 | | | 280 | 6*40 | | | | | | | 169.6 | 24 | | |
| GOORDP04-320 | 254 | | | 320 | 7*40 | | | | | | | 197.6 | 28 | | |
| GOORDP04-360 | 292 | | | 360 | 8*40 | | | | | | | 218.6 | 31 | | |
| GOORDP04-400 | 330 | | | 400 | 9*40 | | | | | | | 239.6 | 34 | | |
| GOORDP04-440 | 354 | | | 440 | 10*40 | | | | | | | 267.6 | 38 | | |
| GOORDP04-480 | 392 | | | 480 | 11*40 | | | | | | | 288.6 | 41 | | |

| Ordering Example : | GOOR | - | D | - | P | - | 03 | - | 75 | - | P |
|---|---|---|---|---|---|---|---|---|---|---|---|
| | Roller | | D rail | | POM Retainer | | Roller dia. | | Rail length | | Precision Level |

## GOORDP

## Material Specification

| Component / Material / Model No. | Rail | Roller | Retainer |
|---|---|---|---|
| GOORDP | SUJ2 | | POM |

| Mounting Dimensions (mm) | | | | | | Load Per Roller | | | Weight (g) / 2 Pieces |
|---|---|---|---|---|---|---|---|---|---|
| T1 | M | d1 | d2 | A | B | Basic Dynamic Load Rating (C) | Basic Static Load Rating (Co) | Allowable Load (Fu) | Standard |
| 0.5 | M2 | 1.65 | 3 | $2^{+0.010}_{0}$ | 1.4 | 125N/1pcs | 144N/1pcs | 48N/1pcs | 9 |
| | | | | | | | | | 13 |
| | | | | | | | | | 17 |
| | | | | | | | | | 20 |
| | | | | | | | | | 24 |
| | | | | | | | | | 29 |
| | | | | | | | | | 33 |
| 0.5 | M3 | 2.55 | 4.4 | $3^{+0.010}_{0}$ | 2 | 293N/1pcs | 292N/1pcs | 97N/1pcs | 27 |
| | | | | | | | | | 40 |
| | | | | | | | | | 53 |
| | | | | | | | | | 66 |
| | | | | | | | | | 78 |
| | | | | | | | | | 91 |
| | | | | | | | | | 104 |
| | | | | | | | | | 117 |
| | | | | | | | | | 130 |
| | | | | | | | | | 142 |
| | | | | | | | | | 155 |
| 0.5 | M4 | 3.3 | 6 | $4^{+0.012}_{0}$ | 3.1 | 638N/1pcs | 761N/1pcs | 254N/1pcs | 94 |
| | | | | | | | | | 139 |
| | | | | | | | | | 183 |
| | | | | | | | | | 228 |
| | | | | | | | | | 273 |
| | | | | | | | | | 317 |
| | | | | | | | | | 362 |
| | | | | | | | | | 406 |
| | | | | | | | | | 451 |
| | | | | | | | | | 496 |
| | | | | | | | | | 540 |
| 0.5 | M5 | 4.3 | 7.5 | $5^{+0.012}_{0}$ | 4.1 | 1230N/1pcs | 1170N/1pcs | 390N/1pcs | 248 |
| | | | | | | | | | 366 |
| | | | | | | | | | 484 |
| | | | | | | | | | 602 |
| | | | | | | | | | 722 |
| | | | | | | | | | 840 |
| | | | | | | | | | 959 |
| | | | | | | | | | 1079 |
| | | | | | | | | | 1197 |
| | | | | | | | | | 1316 |
| | | | | | | | | | 1434 |

GOOBV

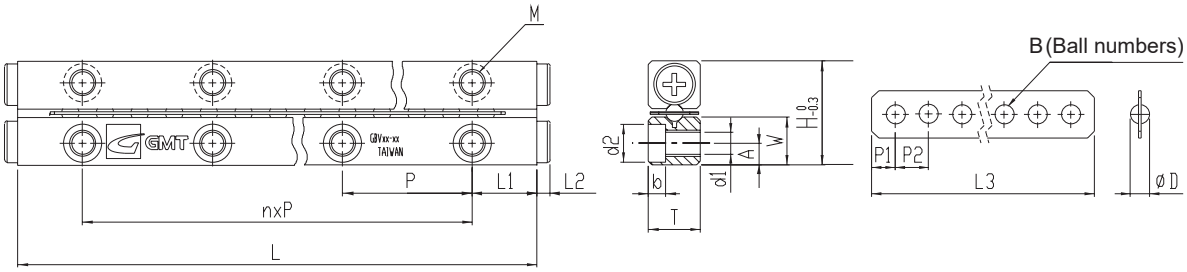


## Specification

| Model No. | Max. Stroke (mm) | Main Dimensions (mm) | | | | | | | Retainer Dimensions (mm) | | | | |
|---|---|---|---|---|---|---|---|---|---|---|---|---|---|
| | | H | T | W | L | n*p | L1 | L2 | ØD | L3 | B | P1 | P2 |
| GOOBV01-20 | 13 | 8.5 | 4 | 3.9 | 20 | 1*10 | 5 | 1.3 | Ø1.5 | 15.5 | 5 | 1.75 | 3 |
| GOOBV01-30 | 21 | | | | 30 | 2*10 | | | | 21.5 | 7 | | |
| GOOBV01-40 | 29 | | | | 40 | 3*10 | | | | 27.5 | 9 | | |
| GOOBV01-50 | 37 | | | | 50 | 4*10 | | | | 33.5 | 11 | | |
| GOOBV01-60 | 45 | | | | 60 | 5*10 | | | | 39.5 | 13 | | |
| GOOBV01-70 | 53 | | | | 70 | 6*10 | | | | 45.5 | 15 | | |
| GOOBV01-80 | 61 | | | | 80 | 7*10 | | | | 51.5 | 17 | | |
| GOOBV02-30 | 24 | 12 | 6 | 5.5 | 30 | 1*15 | 7.5 | 1.5 | Ø2 | 20.6 | 5 | 2.3 | 4 |
| GOOBV02-45 | 30 | | | | 45 | 2*15 | | | | 32.6 | 8 | | |
| GOOBV02-60 | 44 | | | | 60 | 3*15 | | | | 40.6 | 10 | | |
| GOOBV02-75 | 58 | | | | 75 | 4*15 | | | | 48.6 | 12 | | |
| GOOBV02-90 | 72 | | | | 90 | 5*15 | | | | 56.6 | 14 | | |
| GOOBV02-105 | 86 | | | | 105 | 6*15 | | | | 64.6 | 16 | | |
| GOOBV02-120 | 100 | | | | 120 | 7*15 | | | | 72.6 | 18 | | |
| GOOBV02-135 | 106 | | | | 135 | 8*15 | | | | 84.6 | 21 | | |
| GOOBV02-150 | 120 | | | | 150 | 9*15 | | | | 92.6 | 23 | | |
| GOOBV02-165 | 134 | | | | 165 | 10*15 | | | | 100.6 | 25 | | |
| GOOBV02-180 | 148 | | | | 180 | 11*15 | | | | 108.6 | 27 | | |

| Ordering Example : | GOOB | - | V | - | 01 | - | 40 | - | P |
|---|---|---|---|---|---|---|---|---|---|
| | Ball | | V rail | | Ball dia. | | Rail length | | Precision Level |

GOOBV

## Material Specification

| Component / Material / Model No. | Rail | Ball Bearing | Retainer |
|---|---|---|---|
| GOOBV | SUJ2 | | Phosphor bronze (C5191) |

| Mounting Dimensions (mm) | | | | | Load Per Ball Bearing | | | Weight (g) / 2 Pieces |
|---|---|---|---|---|---|---|---|---|
| A | M | d1 | d2 | b | Basic Dynamic Load Rating (C) | Basic Static Load Rating (Co) | Allowable Load (Fu) | Standard |
| 1.8 | M2 | 1.65 | 3 | 1.4 | 7.6N/1pcs | 21N/1pcs | 7.0N/1pcs | 4 |
| | | | | | | | | 6 |
| | | | | | | | | 8 |
| | | | | | | | | 10 |
| | | | | | | | | 12 |
| | | | | | | | | 14 |
| | | | | | | | | 16 |
| 2.5 | M3 | 2.55 | 4.4 | 2 | 12N/1pcs | 37N/1pcs | 12.3N/1pcs | 13 |
| | | | | | | | | 20 |
| | | | | | | | | 26 |
| | | | | | | | | 32 |
| | | | | | | | | 39 |
| | | | | | | | | 45 |
| | | | | | | | | 51 |
| | | | | | | | | 58 |
| | | | | | | | | 64 |
| | | | | | | | | 70 |
| | | | | | | | | 77 |

GOOBV

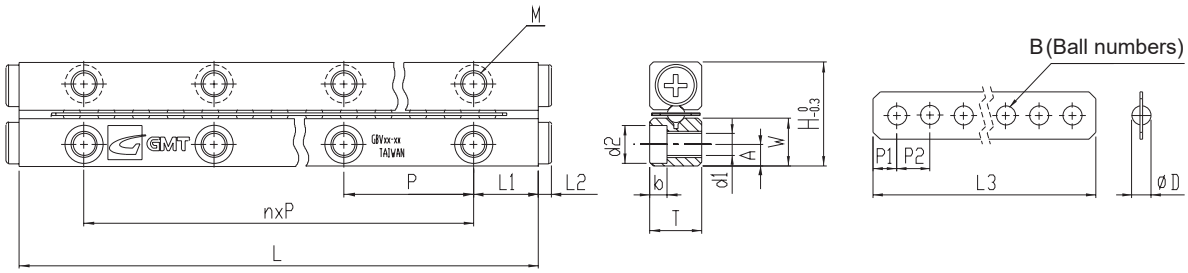


## Specification

| Model No. | Max. Stroke (mm) | Main Dimensions (mm) | | | | | | | Retainer Dimensions (mm) | | | | |
|---|---|---|---|---|---|---|---|---|---|---|---|---|---|
| | | H | T | W | L | n*p | L1 | L2 | ØD | L3 | B | P1 | P2 |
| GOOBV03-50 | 34 | 18 | 8 | 8.3 | 50 | 1*25 | 12.5 | 2 | Ø3 | 35.7 | 7 | 2.86 | 5 |
| GOOBV03-75 | 54 | | | | 75 | 2*25 | | | | 50.7 | 10 | | |
| GOOBV03-100 | 74 | | | | 100 | 3*25 | | | | 65.7 | 13 | | |
| GOOBV03-125 | 104 | | | | 125 | 4*25 | | | | 75.7 | 15 | | |
| GOOBV03-150 | 124 | | | | 150 | 5*25 | | | | 90.7 | 18 | | |
| GOOBV03-175 | 144 | | | | 175 | 6*25 | | | | 105.7 | 21 | | |
| GOOBV03-200 | 164 | | | | 200 | 7*25 | | | | 120.7 | 24 | | |
| GOOBV03-225 | 184 | | | | 225 | 8*25 | | | | 135.7 | 27 | | |
| GOOBV03-250 | 204 | | | | 250 | 9*25 | | | | 150.7 | 30 | | |
| GOOBV03-275 | 224 | | | | 275 | 10*25 | | | | 165.7 | 33 | | |
| GOOBV03-300 | 244 | | | | 300 | 11*25 | | | | 180.7 | 36 | | |
| GOOBV04-80 | 54 | 22 | 11 | 10 | 80 | 1*40 | 20 | 2 | Ø4 | 56.8 | 8 | 3.9 | 7 |
| GOOBV04-120 | 92 | | | | 120 | 2*40 | | | | 77.8 | 11 | | |
| GOOBV04-160 | 130 | | | | 160 | 3*40 | | | | 98.8 | 14 | | |
| GOOBV04-200 | 154 | | | | 200 | 4*40 | | | | 126.8 | 18 | | |
| GOOBV04-240 | 192 | | | | 240 | 5*40 | | | | 147.8 | 21 | | |
| GOOBV04-280 | 230 | | | | 280 | 6*40 | | | | 168.8 | 24 | | |
| GOOBV04-320 | 254 | | | | 320 | 7*40 | | | | 196.8 | 28 | | |
| GOOBV04-360 | 292 | | | | 360 | 8*40 | | | | 217.8 | 31 | | |
| GOOBV04-400 | 330 | | | | 400 | 9*40 | | | | 238.8 | 34 | | |
| GOOBV04-440 | 354 | | | | 440 | 10*40 | | | | 266.8 | 38 | | |
| GOOBV04-480 | 392 | | | | 480 | 11*40 | | | | 287.8 | 41 | | |

| Ordering Example : | GOOB | - | V | - | 03 | - | 75 | - | P |
|---|---|---|---|---|---|---|---|---|---|
| | Ball | | V rail | | Ball dia. | | Rail length | | Precision Level |

GOOBV

## Material Specification

| Component / Material / Model No. | Rail | Ball Bearing | Retainer |
|---|---|---|---|
| GOOBV | SUJ2 | | Phosphor bronze (C5191) |

| Mounting Dimensions (mm) | | | | | Load Per Ball Bearing | | | Weight (g) / 2 Pieces |
|---|---|---|---|---|---|---|---|---|
| A | M | d1 | d2 | b | Basic Dynamic Load Rating (C) | Basic Static Load Rating (Co) | Allowable Load (Fu) | Standard |
| 3.5 | M4 | 3.3 | 6 | 3.1 | 26.5N/1pcs | 84N/1pcs | 28N/1pcs | 46 |
| | | | | | | | | 68 |
| | | | | | | | | 90 |
| | | | | | | | | 112 |
| | | | | | | | | 134 |
| | | | | | | | | 156 |
| | | | | | | | | 178 |
| | | | | | | | | 200 |
| | | | | | | | | 222 |
| | | | | | | | | 244 |
| | | | | | | | | 266 |
| 4.5 | M5 | 4.3 | 7.5 | 4.1 | 43N/1pcs | 148N/1pcs | 49.3N/1pcs | 121 |
| | | | | | | | | 179 |
| | | | | | | | | 237 |
| | | | | | | | | 295 |
| | | | | | | | | 353 |
| | | | | | | | | 411 |
| | | | | | | | | 470 |
| | | | | | | | | 528 |
| | | | | | | | | 586 |
| | | | | | | | | 645 |
| | | | | | | | | 703 |

GOOBV

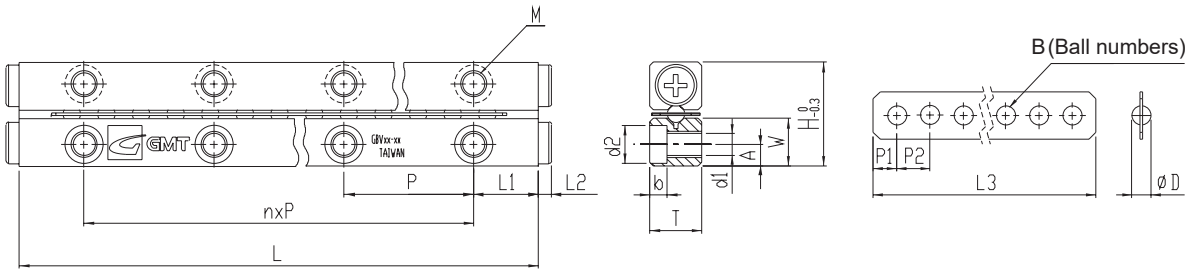


## Specification

| Model No. | Max. Stroke (mm) | Main Dimensions (mm) | | | | | | | Retainer Dimensions (mm) | | | | |
|---|---|---|---|---|---|---|---|---|---|---|---|---|---|
| | | H | T | W | L | n*p | L1 | L2 | ØD | L3 | B | P1 | P2 |
| GOOBV06-100 | 80 | | | | 100 | 1*50 | | | | 63.6 | 7 | | |
| GOOBV06-150 | 108 | | | | 150 | 2*50 | | | | 99.6 | 11 | | |
| GOOBV06-200 | 154 | | | | 200 | 3*50 | | | | 126.6 | 14 | | |
| GOOBV06-250 | 200 | | | | 250 | 4*50 | | | | 153.6 | 17 | | |
| GOOBV06-300 | 246 | | | | 300 | 5*50 | | | | 180.6 | 20 | | |
| GOOBV06-350 | 274 | 31 | 15 | 14 | 350 | 6*50 | 25 | 2 | 6 | 216.6 | 24 | 4.8 | 9 |
| GOOBV06-400 | 320 | | | | 400 | 7*50 | | | | 243.6 | 27 | | |
| GOOBV06-450 | 366 | | | | 450 | 8*50 | | | | 270.6 | 30 | | |
| GOOBV06-500 | 412 | | | | 500 | 9*50 | | | | 297.6 | 33 | | |
| GOOBV06-550 | 458 | | | | 550 | 10*50 | | | | 324.6 | 36 | | |
| GOOBV06-600 | 486 | | | | 600 | 11*50 | | | | 360.6 | 40 | | |



| Ordering Example : | GOOB | - | V | - | 06 | - | 200 | - | P |
|---|---|---|---|---|---|---|---|---|---|
| | Ball | | V rail | | Ball dia. | | Rail length | | Precision Level |

GOOBV

## Material specification

| Component / Material / Model No. | Rail | Ball Bearing | Retainer |
|---|---|---|---|
| GOOBV | SUJ2 | | Phosphor bronze (C5191) |

| Mounting Dimensions (mm) | | | | | Load Per Ball Bearing | | | Weight (g) / 2 Pieces |
|---|---|---|---|---|---|---|---|---|
| A | M | d1 | d2 | b | Basic Dynamic Load Rating (C) | Basic Static Load Rating (Co) | Allowable Load (Fu) | Standard |
| 6 | M6 | 5.3 | 9.5 | 5.2 | 92N/1pcs | 330N/1pcs | 110N/1pcs | 287 |
| | | | | | | | | 429 |
| | | | | | | | | 571 |
| | | | | | | | | 712 |
| | | | | | | | | 852 |
| | | | | | | | | 993 |
| | | | | | | | | 1135 |
| | | | | | | | | 1275 |
| | | | | | | | | 1417 |
| | | | | | | | | 1558 |
| | | | | | | | | 1250 |

## GOOBD

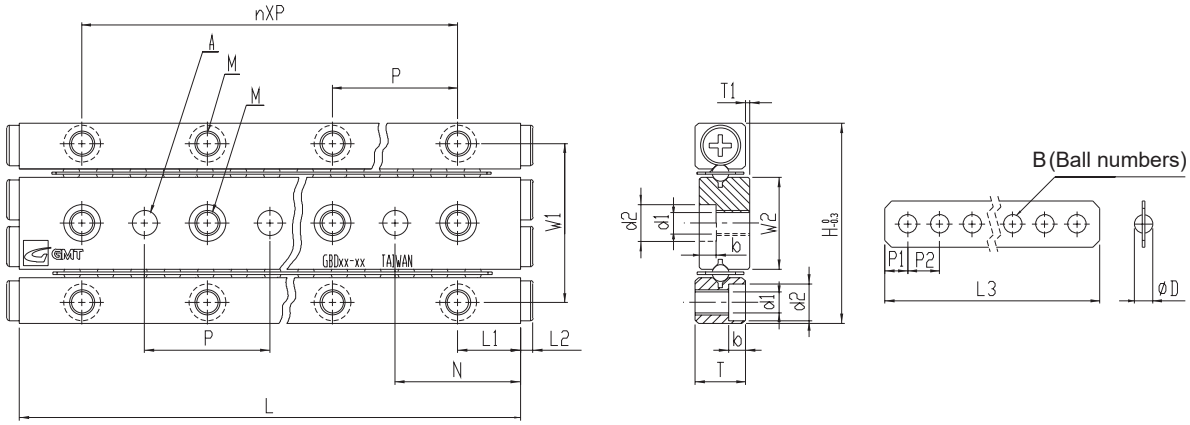


## Specification

| Model No. | Max. Stroke (mm) | Main Dimensions (mm) | | | | | | | | | Retainer Dimensions (mm) | | | | | |
|---|---|---|---|---|---|---|---|---|---|---|---|---|---|---|---|---|
| | | H | T | L | n*p | W1 | W2 | L1 | L2 | N | ØD | L3 | B | P1 | P2 | T1 |
| GOOBD01-20 | 13 | | | 20 | 1*10 | | | | | | | 15.5 | 5 | | | |
| GOOBD01-30 | 21 | | | 30 | 2*10 | | | | | | | 21.5 | 7 | | | |
| GOOBD01-40 | 29 | | | 40 | 3*10 | | | | | | | 27.5 | 9 | | | |
| GOOBD01-50 | 37 | 17 | 4 | 50 | 4*10 | 13.4 | 7.8 | 5 | 1.3 | 10 | Ø1.5 | 33.5 | 11 | 1.75 | 3 | 0.5 |
| GOOBD01-60 | 45 | | | 60 | 5*10 | | | | | | | 39.5 | 13 | | | |
| GOOBD01-70 | 53 | | | 70 | 6*10 | | | | | | | 45.5 | 15 | | | |
| GOOBD01-80 | 61 | | | 80 | 7*10 | | | | | | | 51.5 | 17 | | | |
| GOOBD02-30 | 24 | | | 30 | 1*15 | | | | | | | 20.6 | 5 | | | |
| GOOBD02-45 | 30 | | | 45 | 2*15 | | | | | | | 32.6 | 8 | | | |
| GOOBD02-60 | 44 | | | 60 | 3*15 | | | | | | | 40.6 | 10 | | | |
| GOOBD02-75 | 58 | | | 75 | 4*15 | | | | | | | 48.6 | 12 | | | |
| GOOBD02-90 | 72 | | | 90 | 5*15 | | | | | | | 56.6 | 14 | | | |
| GOOBD02-105 | 86 | 24 | 6 | 105 | 6*15 | 19 | 11 | 7.5 | 1.5 | 15 | Ø2 | 64.6 | 16 | 2.3 | 4 | 0.5 |
| GOOBD02-120 | 100 | | | 120 | 7*15 | | | | | | | 72.6 | 18 | | | |
| GOOBD02-135 | 106 | | | 135 | 8*15 | | | | | | | 84.6 | 21 | | | |
| GOOBD02-150 | 120 | | | 150 | 9*15 | | | | | | | 92.6 | 23 | | | |
| GOOBD02-165 | 134 | | | 165 | 10*15 | | | | | | | 100.6 | 25 | | | |
| GOOBD02-180 | 148 | | | 180 | 11*15 | | | | | | | 108.6 | 27 | | | |



| Ordering Example : | GOOB | - | D | - | 01 | - | 40 | - | P |
|---|---|---|---|---|---|---|---|---|---|
| | Ball | | D rail | | Ball dia. | | Rail length | | Precision Level |

GOOBD

## Material Specification

| Component / Material / Model No. | Rail | Ball Bearing | Retainer |
|---|---|---|---|
| GOOBD | SUJ2 | | Phosphor bronze (C5191) |

| Mounting Dimensions (mm) | | | | | Load Per Ball Bearing | | | Weight (g) / 2 Pieces |
|---|---|---|---|---|---|---|---|---|
| M | d1 | d2 | A | B | Basic Dynamic Load Rating (C) | Basic Static Load Rating (Co) | Allowable Load (Fu) | Standard |
| M2 | 1.65 | 3 | $2^{+0.010}_{0}$ | 1.4 | 7.6N/1pcs | 21N/1pcs | 7.0N/1pcs | 9 |
| | | | | | | | | 13 |
| | | | | | | | | 16 |
| | | | | | | | | 20 |
| | | | | | | | | 24 |
| | | | | | | | | 28 |
| | | | | | | | | 33 |
| M3 | 2.55 | 4.4 | $3^{+0.010}_{0}$ | 2 | 12N/1pcs | 37N/1pcs | 12.3N/1pcs | 27 |
| | | | | | | | | 40 |
| | | | | | | | | 53 |
| | | | | | | | | 66 |
| | | | | | | | | 78 |
| | | | | | | | | 91 |
| | | | | | | | | 104 |
| | | | | | | | | 117 |
| | | | | | | | | 129 |
| | | | | | | | | 142 |
| | | | | | | | | 155 |

## GOOBD

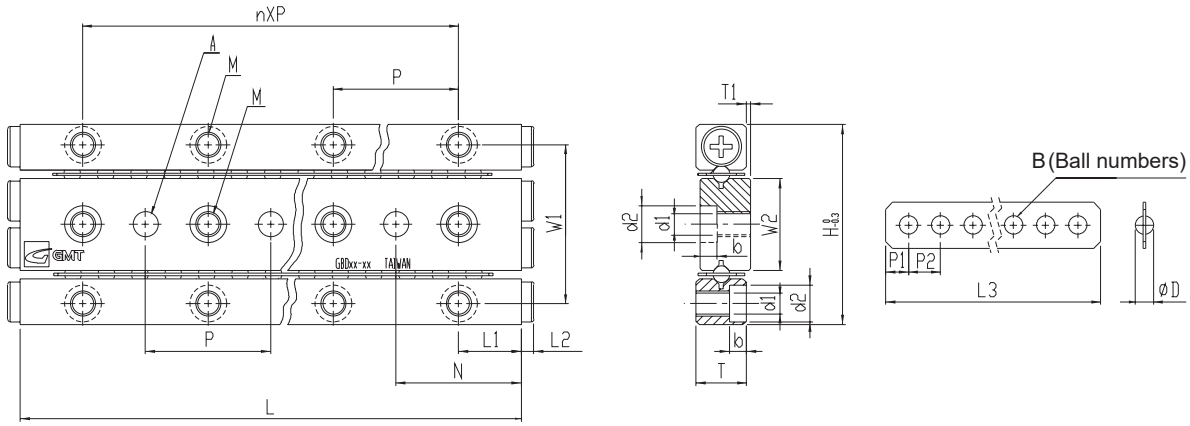


## Specification

| Model No. | Max. Stroke (mm) | Main Dimensions (mm) | | | | | | | | | Retainer Dimensions (mm) | | | | | |
|---|---|---|---|---|---|---|---|---|---|---|---|---|---|---|---|---|
| | | H | T | L | n*p | W1 | W2 | L1 | L2 | N | ØD | L3 | B | P1 | P2 | T1 |
| GOOBD03-50 | 34 | | | 50 | 1*25 | | | | | | | 35.7 | 7 | | | |
| GOOBD03-75 | 54 | | | 75 | 2*25 | | | | | | | 50.7 | 10 | | | |
| GOOBD03-100 | 74 | | | 100 | 3*25 | | | | | | | 65.7 | 13 | | | |
| GOOBD03-125 | 104 | | | 125 | 4*25 | | | | | | | 75.7 | 15 | | | |
| GOOBD03-150 | 124 | | | 150 | 5*25 | | | | | | | 90.7 | 18 | | | |
| GOOBD03-175 | 144 | 36 | 8 | 175 | 6*25 | 29 | 16.6 | 12.5 | 2 | 25 | Ø3 | 105.7 | 21 | 2.86 | 5 | 0.5 |
| GOOBD03-200 | 164 | | | 200 | 7*25 | | | | | | | 120.7 | 24 | | | |
| GOOBD03-225 | 184 | | | 225 | 8*25 | | | | | | | 135.7 | 27 | | | |
| GOOBD03-250 | 204 | | | 250 | 9*25 | | | | | | | 150.7 | 30 | | | |
| GOOBD03-275 | 224 | | | 275 | 10*25 | | | | | | | 165.7 | 33 | | | |
| GOOBD03-300 | 244 | | | 300 | 11*25 | | | | | | | 180.7 | 36 | | | |
| GOOBD04-80 | 54 | | | 80 | 1*40 | | | | | | | 56.8 | 8 | | | |
| GOOBD04-120 | 92 | | | 120 | 2*40 | | | | | | | 77.8 | 11 | | | |
| GOOBD04-160 | 130 | | | 160 | 3*40 | | | | | | | 98.8 | 14 | | | |
| GOOBD04-200 | 154 | | | 200 | 4*40 | | | | | | | 126.8 | 18 | | | |
| GOOBD04-240 | 192 | | | 240 | 5*40 | | | | | | | 147.8 | 21 | | | |
| GOOBD04-280 | 230 | 44 | 11 | 280 | 6*40 | 35 | 20 | 20 | 2 | 40 | Ø4 | 168.8 | 24 | 3.9 | 7 | 0.5 |
| GOOBD04-320 | 254 | | | 320 | 7*40 | | | | | | | 196.8 | 28 | | | |
| GOOBD04-360 | 292 | | | 360 | 8*40 | | | | | | | 217.8 | 31 | | | |
| GOOBD04-400 | 330 | | | 400 | 9*40 | | | | | | | 238.8 | 34 | | | |
| GOOBD04-440 | 354 | | | 440 | 10*40 | | | | | | | 266.8 | 38 | | | |
| GOOBD04-480 | 392 | | | 480 | 11*40 | | | | | | | 287.8 | 41 | | | |

| Ordering Example : | GOOB | - | D | - | 03 | - | 75 | - | P |
|---|---|---|---|---|---|---|---|---|---|
| | Ball | | D rail | | Ball dia. | | Rail length | | Precision Level |

GOOBD

## Material Specification

| Component / Material / Model No. | Rail | Ball Bearing | Retainer |
|---|---|---|---|
| GOOBD | SUJ2 | | Phosphor bronze (C5191) |

| Mounting Dimensions (mm) | | | | | Load Per Ball Bearing | | | Weight (g) / 2 Pieces |
|---|---|---|---|---|---|---|---|---|
| M | d1 | d2 | A | b | Basic Dynamic Load Rating (C) | Basic Static Load Rating (Co) | Allowable Load (Fu) | Standard |
| M4 | 3.3 | 6 | $4^{+0.012}_{0}$ | 3.1 | 26.5N/1pcs | 84N/1pcs | 28N/1pcs | 94 |
| | | | | | | | | 139 |
| | | | | | | | | 183 |
| | | | | | | | | 228 |
| | | | | | | | | 272 |
| | | | | | | | | 317 |
| | | | | | | | | 361 |
| | | | | | | | | 406 |
| | | | | | | | | 450 |
| | | | | | | | | 495 |
| | | | | | | | | 539 |
| M5 | 4.3 | 7.5 | $5^{+0.012}_{0}$ | 4.1 | 43N/1pcs | 148N/1pcs | 49.3N/1pcs | 247 |
| | | | | | | | | 365 |
| | | | | | | | | 483 |
| | | | | | | | | 601 |
| | | | | | | | | 720 |
| | | | | | | | | 838 |
| | | | | | | | | 957 |
| | | | | | | | | 1076 |
| | | | | | | | | 1194 |
| | | | | | | | | 1314 |
| | | | | | | | | 1432 |

## Model No. Introduction

# GOOR A 30 65 - S

unit : mm

| GOOR | A | | | | | 30 | 65 | N |
|---|---|---|---|---|---|---|---|---|
| Transmission | Model | Normal | Black Coating | Antirust(N) | Corrosionresisting (S) | Table Width | Table Length | Material |
| GOOR: roller | A | | | | | 30, 40, 60<br>80, 100, 145 | As shown SPEC | N:S50C+Ni<br>S:SUS440C+Ni<br>B:S50C+phosphate |
| | B | | | | | 30, 40, 60<br>80, 100, 145 | | |
| | C | | | | | 20, 30, 40 | | |
| | M | | | | | 30, 40, 60<br>80, 100 | | |
| | H | | | | | 20, 30, 40 | | |
| | S | | | | | 20, 30, 40 | | |

- Table in N series, is antirust, apply to clean room environment.
- Table in S series, is antirust and corrosion-resisting, apply to clean room environment.
- Table in B series, is antirust, apply to clean room environment.
- All parts are cryogenic finished to increase 30% durability. ( Refer to P.0451 )

## Component Material Introduction

| Apply To | Model No. | Material Indication | | | |
|---|---|---|---|---|---|
| | | Table | Rail | Retainer | Roller |
| Normal | GOORA/GOORB/GOORC<br>COORM/GOORH/GOORS | Aluminum+anodized black | SUJ2 | SUS304 | SUJ2 |
| Antirust | GOORA-N/GOORB-N<br>GOORC-N/GOORM-N<br>GOORH-N/GOORS-N | S50C+Ni | SUJ2+Ni<br>• V-groove in rail, no surface finished | SUS304 | SUJ2 |
| Antirust | GOORA-B/GOORB-B<br>GOORC-B/GOORM-B<br>GOORH-B/GOORS-B | S50C+PHOSPHATE | SUJ2 | SUS304 | SUJ2 |
| Corrosion-Resisting | GOORA-S/GOORB-S<br>GOORC-S/GOORM-S<br>GOORH-S/GOORS-S | SUS440C+Ni<br>• Table and rail in 1 unit in this series<br>• V-groove in rail, no surface finished | | SUS304 | SUS440C |

## Crossed Roller Slide Table

Table is composed of GOOYII crossed roller type slide rail set, V-grooved, crossed rollers matched with assembly plane in high accuracy processing,and base; installed with limit mechanism between two ends of table, is small type of limit stroke linear motion product in high rigidity. Performance as high accuracy and low friction, apply to electric parts used in automatic installation equipment and optical gauge.

## Slide Table Unit Seclection Procedure

1.Select unit width and length.
2. Select model per installation.
3. Acquire model no. from catalogs.
4. Select standard, antirust or corrosion-resisting per environment request.

## Installation Selection

| Screw Lock | Countersink Lock |
|---|---|
| GOORA 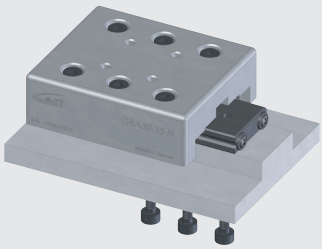 | GOORM 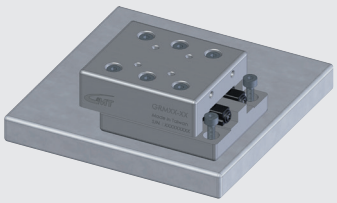 |
| GOORS 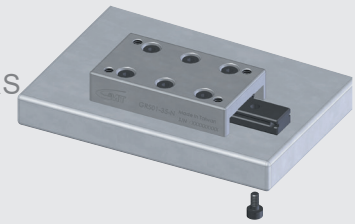 | GOORB 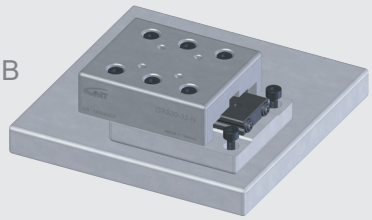 |
| GOORC 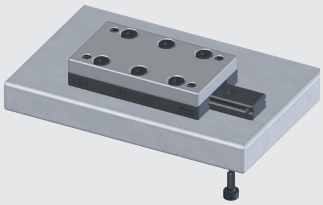 | GOORH 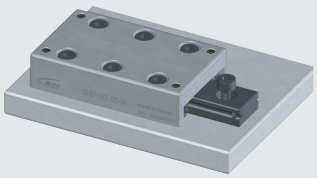 |

## Slide Table Property

| | |
|---|---|
| High Accuracy | In order to perform function of GOOYII Slide Table entirely,all assembly planes of table and base are processed in precise grinding to get linear motion in high accuracy. |
| Low Friction | Low friction because of non-circulation. Stable performance in whether low speed or high speed. |
| High Rigidity, Space Saving | Besides high load capacity and high rigidity of roller guide in GOOYII linear motion table, space saving design is also considered at same time. |
| No Demand of Adjustment | Accuracy and preload would be matched perfectly to use directly without heavy adjustment. |
| Easy Installation | Standardized assembly holes of unit and base are easy to lock and secure with screw only to have linear motion in high accuracy. |

## Table Accuracy Description

Unit : mm

| Table Accuracy Inspection Level | | | Rail Accuracy Inspection Level | | |
|---|---|---|---|---|---|
| Table Length | Middelivery amplitude | Sidedelivery amplitude | N Size Tolerance | M Size Tolerance | Straightness |
| 0~50 | 0.002 | 0.004 | - 0.015<br>- 0.035 | - 0.03<br>- 0.07 | 0.002 |
| 50~100 | 0.002 | 0.005 | | | 0.002 |
| 100~150 | 0.003 | 0.006 | | | 0.003 |
| 150~200 | 0.003 | 0.007 | | | 0.003 |
| 200~250 | 0.003 | 0.007 | | | 0.003 |
| 250~300 | 0.003 | 0.007 | | | 0.003 |
| 300~350 | 0.004 | 0.008 | | | 0.004 |
| 350~400 | 0.004 | 0.008 | | | 0.004 |
| 400~450 | 0.004 | 0.008 | | | 0.004 |
| 450~500 | 0.004 | 0.008 | | | 0.004 |
| 500~550 | 0.004 | 0.009 | | | 0.004 |
| 550~600 | 0.004 | 0.009 | | | 0.004 |

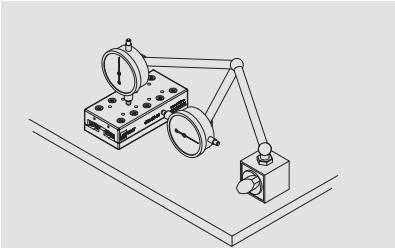

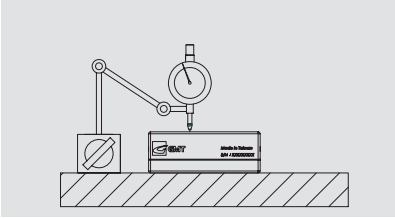

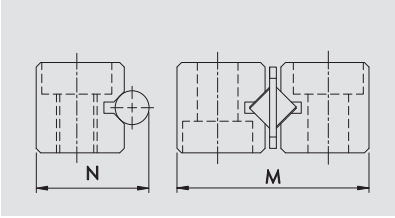

# Rated Life Calculation

$$L = \left( \frac{f_T}{f_W} \cdot \frac{C}{P_C} \right)^{\frac{10}{3}} \times 100$$

L : Rated life (km)

C : Basic dynamic load (kN)

$P_C$ : Radial load calculated value (kN)

$f_T$ : Temperature factor

$f_W$ : Load factor

## $f_T$ : Temperature factor

Running system in environment over 100°C, needs consideration of bad effect from high temperature, basic rated load x temperature factor as shown on the right figuration.

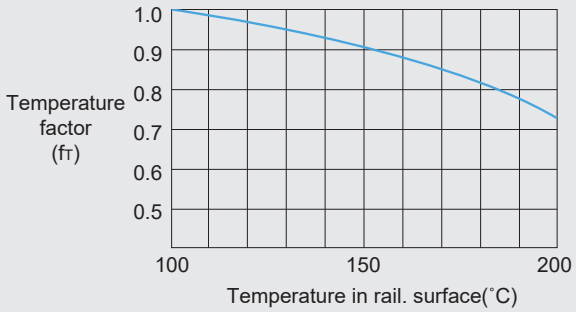


## $f_W$ : Load factor

Machine running back and forth usually is accompanied with vibration or shock, especially vibration happened in high speed running or shock caused by running stop frequently, but not easy to calculate all of them correctly. When actual load could not be calculated, or in case of large
effect from speed, vibration, please use basic rated load( C ) to devide relative experienced load factors as right data shown.

Load factor(($f_W$)

| Vibration / Shock | Speed(V) | $f_W$ |
|---|---|---|
| Tiny | Dead slow V≦0.25m/s | 1~1.2 |
| Small | Slow 0.25<V≦1m/s | 1.2~1.5 |

## Working life hours($L_h$)

After acquirement of rated life(L), use formula stated on the right side to calculate working life hours, if stroke length and travel times per minute are constant.

$$L_h = \frac{L \times 10^6}{2 \times \ell_S \times n_1 \times 60}$$

$L_h$ : Working life hours (h)

$\ell_S$ : Stroke length (mm)

$n_1$ : Travel times per minute ($min_1$)

## Torque $M_R$

| Single static load rating $C_O$<br>B for Ball quantity in one row | Center distance between two rows $L_R$<br>R for Roller quantity in one row |
|---|---|
| **Ball** | **Roller** |
| $M_R = B*\cos\frac{\pi}{4}*C_O*L_R$ | $M_R = \frac{R}{2}*C_O*L_R$ |

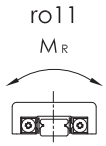


## Torque $M_P$

| Ball pitch P Ball quantity = B<br>Roller pitch P Roller quantity = R | |
|---|---|
| **Ball** | **Roller** |
| $M_P = F_d \div S_f * 2^{\frac{7}{9}}*C_O*\cos\frac{\pi}{4}*P*\frac{2B^2-B}{6}$ | $M_P = \frac{1}{2}*(\frac{R}{2})^2*C_O*P$ |

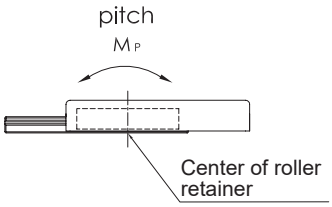


## Torque $M_Y$

| Ball | Roller |
|---|---|
| $M_Y = F_d \div S_f * 2^{\frac{7}{9}}*C_O*\cos\frac{\pi}{4}*P*\frac{2B^2-B}{6}$ | $M_Y = \frac{1}{2}*(R^2-R)*C_O*P$ |

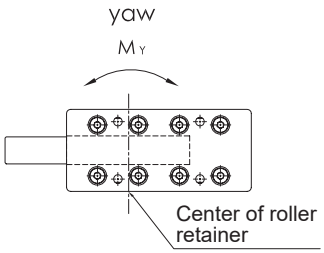


$S_f$ : Safety factor

Safety Precaution



| | |
|---|---|
| Please Operate Carefully | In case of carelessness of falling off Slide Table or having unusual collision and extrusion, may cause surface dent on V-grooves and rollers to result in running in non-smooth, and bad effect to accuracy. Therefore please operate with care particularly. |
| Anti-Dust | If dust, impurities mixed with components inside Slide table, may cause decrease of accuracy or life hours.<br>Please set outer dust cover to protect table used in bad environment. |
| Lubrication | Slide table filled with lithium soap lubricant before inspection, could be used directly as soon as acquirement.<br>Subsequently add lubricant in same series as condition.<br>◎ Relative request of lubricant compatibilty ( Refer to P.0450 ) |
| Deviation Of Roller Retainer | Slide table running in high speeding, off-center load or vibration conditions, may cause retainer deviation.<br>It's normally recommended to use in speed below 30m/min.<br>In addition, suggested solution to deviation of roller retainer is couple times of movement in full stroke to center roller retainer while running. |
| Screw Adjustment | Slide table, proofread in best accuracy and preloaded in perfect condition.<br>No disassemble arbitrarily lock screw of adjust screw and rail. |

# Product Specification Sild Table

## GOORA / GOORA - N / GOORA - B

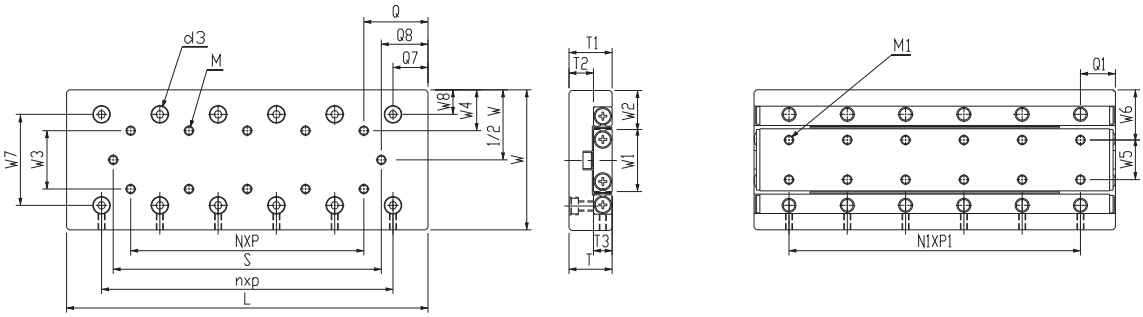


## Specification

| Model No. | | | Max. Stroke (mm) | Roller Dia. (mm) | Main Dimensions (mm) | | | Table Mounting Dimensions (mm) | | | | | | | | | | | | | |
|---|---|---|---|---|---|---|---|---|---|---|---|---|---|---|---|---|---|---|---|---|---|
| Standard | Antirust | Black Coating | | | W | T | L | $W_3$ | $W_4$ | $W_7$ | $W_8$ | Q | $Q_7$ | $Q_8$ | N*P | M | n*p | S | $d_3$ | $T_1$ | $T_2$ |
| GOORA30-25 | GOORA30-25-N | GOORA30-25-B | 12 | | | | 25 | | | | | | | 2.5 | / | | 1*10 | 20 | | | |
| GOORA30-35 | GOORA30-35-N | GOORA30-35-B | 18 | | | | 35 | | | | | | | 4.5 | 1*10 | | 2*10 | 26 | | | |
| GOORA30-45 | GOORA30-45-N | GOORA30-45-B | 25 | | | | 45 | | | | | | | 6 | 2*10 | | 3*10 | 33 | | | |
| GOORA30-55 | GOORA30-55-N | GOORA30-55-B | 32 | Ø1.5 | 30±0.1 | 11±0.1 | 55 | 10 | 10 | 18.4 | 5.8 | 12.5 | 7.5 | 7.5 | 3*10 | M2 | 4*10 | 40 | 4.1 | 11 | 7 |
| GOORA30-65 | GOORA30-65-N | GOORA30-65-B | 40 | | | | 65 | | | | | | | 8.5 | 4*10 | | 5*10 | 48 | | | |
| GOORA30-75 | GOORA30-75-N | GOORA30-75-B | 45 | | | | 75 | | | | | | | 11 | 5*10 | | 6*10 | 53 | | | |
| GOORA30-85 | GOORA30-85-N | GOORA30-85-B | 50 | | | | 85 | | | | | | | 13.5 | 6*10 | | 7*10 | 58 | | | |
| GOORA40-35 | GOORA40-35-N | GOORA40-35-B | 18 | Ø2.0 | | 14±0.1 | 35 | | | 25 | 7.5 | | 10 | 3 | / | | 1*15 | 29 | 6 | 14 | 8 |
| GOORA40-50 | GOORA40-50-N | GOORA40-50-B | 30 | | | | 50 | | | | | | 12.5 | 4.5 | 1*15 | | 1*25 | 41 | | | |
| GOORA40-65 | GOORA40-65-N | GOORA40-65-B | 40 | | | | 65 | | | | | | 20 | 7 | 2*15 | | 1*25 | 51 | | | |
| GOORA40-80 | GOORA40-80-N | GOORA40-80-B | 50 | Ø3.0 | 40±0.1 | 15±0.1 | 80 | 15 | 12.5 | 25.5 | 7.25 | 17.5 | 15 | 9.5 | 3*15 | M3 | 2*25 | 61 | 7.5 | 15 | 7 |
| GOORA40-95 | GOORA40-95-N | GOORA40-95-B | 60 | | | | 95 | | | | | | 22.5 | 12 | 4*15 | | 2*25 | 71 | | | |
| GOORA40-110 | GOORA40-110-N | GOORA40-110-B | 70 | | | | 110 | | | | | | 17.5 | 14.5 | 5*15 | | 3*25 | 81 | | | |
| GOORA40-125 | GOORA40-125-N | GOORA40-125-B | 80 | | | | 125 | | | | | | 25 | 17 | 6*15 | | 3*25 | 91 | | | |
| GOORA60-55 | GOORA60-55-N | GOORA60-55-B | 30 | | | | 55 | | | | | | | 5.5 | / | | 1*25 | 44 | | | |
| GOORA60-80 | GOORA60-80-N | GOORA60-80-B | 45 | | | | 80 | | | | | | | 10.5 | 1*25 | | 2*25 | 59 | | | |
| GOORA60-105 | GOORA60-105-N | GOORA60-105-B | 60 | | | | 105 | | | | | | | 15.5 | 2*25 | | 3*25 | 74 | | | |
| GOORA60-130 | GOORA60-130-N | GOORA60-130-B | 75 | Ø3.0 | 60±0.1 | 18.5±0.1 | 130 | 25 | 17.5 | 39 | 10.5 | 27.5 | 15 | 20.5 | 3*25 | M4 | 4*25 | 89 | 7.5 | 18.5 | 10.5 |
| GOORA60-155 | GOORA60-155-N | GOORA60-155-B | 90 | | | | 155 | | | | | | | 25.5 | 4*25 | | 5*25 | 104 | | | |
| GOORA60-180 | GOORA60-180-N | GOORA60-180-B | 105 | | | | 180 | | | | | | | 30.5 | 5*25 | | 6*25 | 119 | | | |
| GOORA60-205 | GOORA60-205-N | GOORA60-205-B | 130 | | | | 205 | | | | | | | 30.5 | 6*25 | | 7*25 | 144 | | | |

| Ordering Example : | GOORA | - | 30 | - | 25 | - | N |
|---|---|---|---|---|---|---|---|
| | A type table | | Table width | | Table length | | Antirust |

## GOORA / GOORA - N / GOORA - B

GOORA

GOORA-N

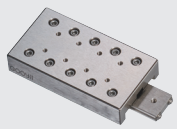

GOORA-B

## Material Specification

| Component / Material / Model No. | Table | Rail | Retainer | Roller |
|---|---|---|---|---|
| GOORA | Aluminum alloy +black anodized | SUJ2 | SUS304 | SUJ2 |
| GOORA - N | S50C+Ni | SUJ2+Ni | SUS304 | SUJ2 |
| GOORA - B | S50C +phosphate | SUJ2 | SUS304 | SUJ2 |

GOORA-N No Surface finished to V-groove surface of the rail.

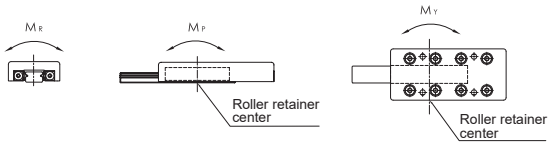


★ Each of load and torque changes oppositely in stroke variation

| Base Mounting Dimensions (Mm) | | | | | | | | Basic Dynamic Load Rating C(N) | Basic Static Load Rating Co(N) | Allow-Able Load Fu(N) | Static Rated Moment | | | Weight (kg) | | Table Moving Accuracy (μm) | |
|---|---|---|---|---|---|---|---|---|---|---|---|---|---|---|---|---|---|
| $T_3$ | $W_1$ | $W_2$ | $W_5$ | $W_6$ | $N_1$*$P_1$ | $Q_1$ | $M_1$ | | | | $M_R$ (N•m) | $M_P$ (N•m) | $M_Y$ (N•m) | Standard | Antirust | Center Parallelism | Side Parallelism |
| 4 | 12.8 | 8.6 | / | 15 | 1*10 | 7.5 | M2 | 379 | 576 | 192 | 2.6 | 1.2 | 1.4 | 0.03 | 0.05 | 2 | 4 |
| | | | | | 2*10 | | | 523 | 865 | 288 | 3.9 | 2.6 | 3.0 | 0.04 | 0.08 | | |
| | | | | | 3*10 | | | 657 | 1,153 | 384 | 5.2 | 4.6 | 5.2 | 0.05 | 0.10 | | |
| | | | | | 4*10 | | | 783 | 1,441 | 480 | 6.5 | 7.2 | 7.9 | 0.06 | 0.12 | | 5 |
| | | | | | 5*10 | | | 903 | 1,729 | 576 | 7.8 | 10.4 | 11.2 | 0.07 | 0.15 | | |
| | | | | | 6*10 | | | 1,131 | 2,306 | 769 | 10.4 | 18.4 | 17.3 | 0.09 | 0.17 | | |
| | | | | | 7*10 | | | 1,240 | 2,594 | 865 | 11.7 | 23.3 | 22.0 | 0.10 | 0.19 | | |
| 6 | 17 | 11.5 | / | 20 | 1*15 | 10 | M3 | 8,95 | 1,170 | 390 | 7.0 | 3.1 | 3.9 | 0.07 | 0.13 | 2 | 4 |
| 8 | 13.1 | 13.5 | | | 1*25 | | | 2,901 | 4,567 | 1,522 | 42.6 | 22.8 | 26.6 | 0.13 | 0.21 | | |
| | | | | | 1*25 | 17.5 | | 2,901 | 4,567 | 1,522 | 42.6 | 22.8 | 19.0 | 0.14 | 0.25 | | 5 |
| | | | | | 2*25 | 10 | | 4,338 | 7,611 | 2,537 | 71.0 | 63.4 | 57.1 | 0.20 | 0.33 | | |
| | | | | | 2*25 | 17.5 | | 3,640 | 6,089 | 2,030 | 56.8 | 40.6 | 45.7 | 0.21 | 0.36 | | |
| | | | | | 3*25 | | | 5,005 | 9,133 | 3,044 | 85.2 | 91.3 | 98.9 | 0.27 | 0.45 | 3 | 6 |
| | | | | | 3*25 | 25 | | 5,005 | 9,133 | 3,044 | 85.2 | 91.3 | 83.7 | 0.28 | 0.48 | | |
| 8 | 26.6 | 16.7 | 17 | 21.5 | 1*25 | 15 | M4 | 2,901 | 4,567 | 1,522 | 42.6 | 22.8 | 26.6 | 0.23 | 0.43 | 2 | 5 |
| | | | | | 2*25 | | | 4,338 | 7,611 | 2,537 | 71.0 | 63.4 | 57.1 | 0.34 | 0.62 | | |
| | | | | | 3*25 | | | 5,646 | 10,655 | 3,552 | 99.5 | 124.3 | 115.4 | 0.45 | 0.82 | 3 | 6 |
| | | | | | 4*25 | | | 6,268 | 12,178 | 4,059 | 113.7 | 162.4 | 172.5 | 0.57 | 1.02 | | |
| | | | | | 5*25 | | | 7,462 | 15,222 | 5,074 | 142.1 | 253.7 | 266.4 | 0.66 | 1.21 | | |
| | | | | | 6*25 | | | 8,603 | 18,266 | 6,089 | 170.5 | 365.3 | 350.1 | 0.77 | 1.41 | | 7 |
| | | | | | 7*25 | | | 9,157 | 19,789 | 6,596 | 184.7 | 428.8 | 445.2 | 0.87 | 1.60 | | |

## GOORA / GOORA - N / GOORA - B

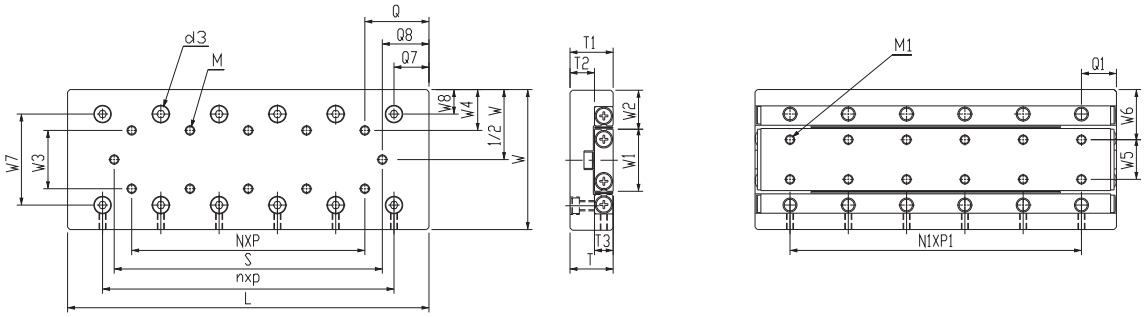


## Specification

| Model No. | | | Max. Stroke (mm) | Roller Dia. (mm) | Main Dimensions (mm) | | | Table Mounting Dimensions (mm) | | | | | | | | | | | | |
|---|---|---|---|---|---|---|---|---|---|---|---|---|---|---|---|---|---|---|---|---|
| Standard | Antirust | Black Coating | | | W | T | L | $W_3$ | $W_4$ | $W_7$ | $W_8$ | Q | $Q_7$ | $Q_8$ | N*P | M | n*p | S | $d_3$ | $T_1$ | $T_2$ |
| GOORA80-85 | GOORA80-85-N | GOORA80-85-B | 50 | | | | 85 | | | | | | | 10.5 | / | | 1*40 | 64 | | | |
| GOORA80-125 | GOORA80-125-N | GOORA80-125-B | 75 | | | | 125 | | | | | | | 18 | 1*40 | | 2*40 | 89 | | | |
| GOORA80-165 | GOORA80-165-N | GOORA80-165-B | 105 | | | | 165 | | | | | | | 23 | 2*40 | | 3*40 | 119 | | | |
| GOORA80-205 | GOORA80-205-N | GOORA80-205-B | 135 | Ø4.0 | 80±0.1 | 24±0.1 | 205 | 40 | 20 | 53 | 13.5 | 42.5 | 22.5 | 28 | 3*40 | M5 | 4*40 | 149 | 9.5 | 24 | 13 |
| GOORA80-245 | GOORA80-245-N | GOORA80-245-B | 155 | | | | 245 | | | | | | | 38 | 4*40 | | 5*40 | 169 | | | |
| GOORA80-285 | GOORA80-285-N | GOORA80-285-B | 185 | | | | 285 | | | | | | | 43 | 5*40 | | 6*40 | 199 | | | |
| GOORA80-325 | GOORA80-325-N | GOORA80-325-B | 215 | | | | 325 | | | | | | | 48 | 6*40 | | 7*40 | 229 | | | |
| GOORA100-110 | GOORA100-110-N | GOORA100-110-B | 60 | | | | 110 | | | | | | | 16.5 | / | | 1*50 | 77 | | | |
| GOORA100-160 | GOORA100-160-N | GOORA100-160-B | 95 | | | | 160 | | | | | | | 23.5 | 1*50 | | 2*50 | 113 | | | |
| GOORA100-210 | GOORA100-210-N | GOORA100-210-B | 130 | | | | 210 | | | | | | | 31 | 2*50 | | 3*50 | 148 | | | |
| GOORA100-260 | GOORA100-260-N | GOORA100-260-B | 165 | Ø6.0 | 100±0.1 | 31±0.1 | 260 | 50 | 25 | 64 | 18 | 55 | 30 | 38.5 | 3*50 | M6 | 4*50 | 183 | 11 | 31 | 16 |
| GOORA100-310 | GOORA100-310-N | GOORA100-310-B | 200 | | | | 310 | | | | | | | 46 | 4*50 | | 5*50 | 218 | | | |
| GOORA100-360 | GOORA100-360-N | GOORA100-360-B | 235 | | | | 360 | | | | | | | 53.5 | 5*50 | | 6*50 | 253 | | | |
| GOORA100-410 | GOORA100-410-N | GOORA100-410-B | 265 | | | | 410 | | | | | | | 63.5 | 6*50 | | 7*50 | 283 | | | |
| GOORA145-210 | GOORA145-210-N | GOORA145-210-B | 130 | | | | 210 | | | | | | | 27 | / | | 1*100 | 156 | | | |
| GOORA145-310 | GOORA145-310-N | GOORA145-310-B | 180 | | | | 310 | | | | | | | 52 | 1*100 | | 2*100 | 206 | | | |
| GOORA145-410 | GOORA145-410-N | GOORA145-410-B | 350 | Ø9.0 | 145±0.1 | 42.5±0.1 | 410 | 85 | 30 | 98 | 23.5 | 105 | 55 | | 2*100 | M8 | 3*100 | 376 | 14 | 43 | 21 |
| GOORA145-510 | GOORA145-510-N | GOORA145-510-B | 450 | | | | 510 | | | | | | | 17 | 3*100 | | 4*100 | 476 | | | |
| GOORA145-610 | GOORA145-610-N | GOORA145-610-B | 550 | | | | 610 | | | | | | | | 4*100 | | 5*100 | 576 | | | |

| Ordering Example : | GOORA | - | 30 | - | 25 | - | N |
|---|---|---|---|---|---|---|---|
| | A type table | | Table width | | Table length | | Antirust |

## GOORA / GOORA - N / GOORA - B

GOORA

GOORA-N

GOORA-B

## Material Specification

| Component / Material / Model No. | Table | Rail | Retainer | Roller |
|---|---|---|---|---|
| GOORA | Aluminum alloy +black anodized | SUJ2 | SUS304 | SUJ2 |
| GOORA - N | S50C+Ni | SUJ2+Ni | SUS304 | SUJ2 |
| GOORA - B | S50C +phosphate | SUJ2 | SUS304 | SUJ2 |

GOORA-N No Surface finished to V-groove surface of the rail.

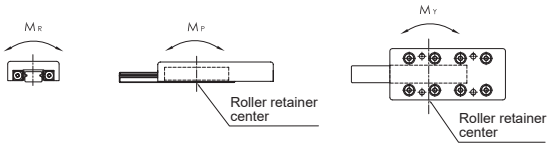


★ Each of load and torque changes oppositely in stroke variation

| Base Mounting Dimensions (mm) | | | | | | | | Basic Dynamic Load Rating C(N) | Basic Static Load Rating Co(N) | Allow-Able Load Fu(N) | Static Rated Moment | | | Weight (kg) | | Table Moving Accuracy (μm) | |
|---|---|---|---|---|---|---|---|---|---|---|---|---|---|---|---|---|---|
| $T_3$ | $W_1$ | $W_2$ | $W_5$ | $W_6$ | $N_1$*$P_1$ | $Q_1$ | $M_1$ | | | | $M_R$ (N·m) | $M_P$ (N·m) | $M_Y$ (N·m) | Standard | Antirust | Center Parallelism | Side Parallelism |
| 11 | 38 | 21 | 27 | 26.5 | 1*40 | 22.5 | M5 | 6,617 | 9,357 | 3,119 | 124.8 | 87.3 | 76.4 | 0.64 | 1.17 | 2 | 5 |
| | | | | | 2*40 | | | 9,097 | 14,035 | 4,678 | 187.1 | 196.5 | 180.1 | 0.95 | 1.72 | 3 | 6 |
| | | | | | 3*40 | | | 10,264 | 16,375 | 5,458 | 218.3 | 267.5 | 286.6 | 1.25 | 2.27 | | 7 |
| | | | | | 4*40 | | | 12,496 | 21,053 | 7,018 | 280.7 | 442.1 | 466.7 | 1.56 | 2.83 | | |
| | | | | | 5*40 | | | 14,612 | 25,732 | 8,577 | 343.1 | 660.4 | 690.5 | 1.87 | 3.39 | | |
| | | | | | 6*40 | | | 16,646 | 30,410 | 10,137 | 405.5 | 922.4 | 957.9 | 2.18 | 3.94 | | |
| | | | | | 7*40 | | | 18,612 | 35,089 | 11,696 | 467.8 | 1228.1 | 1187.2 | 2.49 | 4.50 | 4 | 8 |
| 15 | 42 | 29 | 26 | 37 | 1*50 | 30 | M6 | 13,923 | 21,053 | 7,018 | 315.8 | 2525.6 | 221.1 | 1.31 | 2.39 | 3 | 6 |
| | | | | | 2*50 | | | 16,592 | 26,316 | 8,772 | 394.7 | 394.7 | 434.2 | 1.93 | 3.50 | | |
| | | | | | 3*50 | | | 21,592 | 36,842 | 12,281 | 552.6 | 773.7 | 828.9 | 2.56 | 4.61 | | 7 |
| | | | | | 4*50 | | | 26,285 | 47,369 | 15,790 | 710.5 | 1279.0 | 1207.9 | 3.16 | 5.70 | | |
| | | | | | 5*50 | | | 30,744 | 57,895 | 19,298 | 868.4 | 1910.5 | 1823.7 | 3.78 | 6.81 | | |
| | | | | | 6*50 | | | 35,024 | 68,421 | 22,807 | 1026.3 | 2668.4 | 2565.8 | 4.41 | 7.93 | 4 | 8 |
| | | | | | 7*50 | | | 39,160 | 78,948 | 26,316 | 1184.2 | 3552.6 | 3434.2 | 5.03 | 9.04 | | |
| 21 | 68.4 | 38.3 | 46 | 49.5 | 1*100 | 55 | M8 | 46,991 | 72,741 | 24,247 | 1745.8 | 1697.3 | 1527.6 | 5.35 | 9.30 | 3 | 7 |
| | | | | | 2*100 | | | 61,165 | 101,838 | 33,946 | 2444.1 | 3326.7 | 3564.3 | 7.96 | 13.79 | | |
| | | | | | 3*100 | | | 67,898 | 116,386 | 38,795 | 2793.3 | 4345.1 | 4073.5 | 10.47 | 18.18 | 4 | 8 |
| | | | | | 4*100 | | | 80,829 | 145,482 | 48,494 | 3491.6 | 6789.2 | 6449.7 | 13.06 | 22.66 | | |
| | | | | | 5*100 | | | 93,191 | 158,400 | 52800 | 2640.0 | 8870.4 | 8500.8 | 15.65 | 27.14 | | |

## GOORB / GOORB - N / GOORB - B

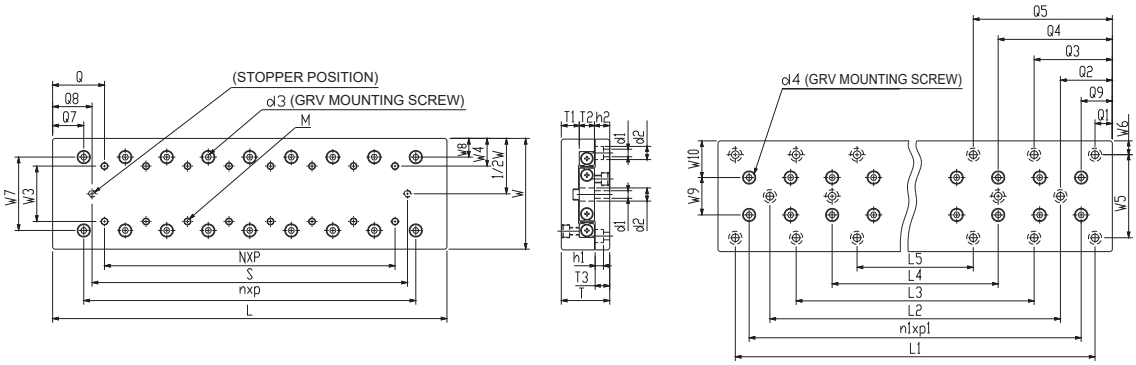


## Specification

| Model No. | | | Max. Stroke (mm) | Roller Dia. (mm) | Main Dimensions (mm) | | | | | | Table Mounting Dimensions (mm) | | | | | | | | | | | | | | | | | |
|---|---|---|---|---|---|---|---|---|---|---|---|---|---|---|---|---|---|---|---|---|---|---|---|---|---|---|---|---|
| Standard | Antirust | Black Coating | | | W | T | L | $T_1$ | $T_2$ | $T_3$ | N*P | n*p | M | S | $d_3$ | Q | $Q_7$ | $Q_8$ | $W_3$ | $W_4$ | $W_7$ | $W_8$ | $L_1$ | $L_2$ | $L_3$ | $n_1$*$p_1$ |
| GOORB30-25 | GOORB30-25-N | GOORB30-25-B | 12 | | | | 25 | | | | / | 1*10 | | 20 | | | | 2.5 | | | | | 18 | | | 1*10 |
| GOORB30-35 | GOORB30-35-N | GOORB30-35-B | 18 | | | | 35 | | | | 1*10 | 2*10 | | 26 | | | | 4.5 | | | | | 28 | | / | 2*10 |
| GOORB30-45 | GOORB30-45-N | GOORB30-45-B | 25 | | | | 45 | | | | 2*10 | 3*10 | | 33 | | | | 6 | | | | | 38 | | | 3*10 |
| GOORB30-55 | GOORB30-55-N | GOORB30-55-B | 32 | Ø1.5 | 30±0.1 | 17±0.1 | 55 | 7 | 4 | 5.5 | 3*10 | 4*10 | M2 | 40 | 4.1 | 12.5 | 7.5 | 7.5 | 10 | 10 | 18.4 | 5.8 | 48 | / | 28 | 4*10 |
| GOORB30-65 | GOORB30-65-N | GOORB30-65-B | 40 | | | | 65 | | | | 4*10 | 5*10 | | 48 | | | | 8.5 | | | | | 58 | | 38 | 5*10 |
| GOORB30-75 | GOORB30-75-N | GOORB30-75-B | 45 | | | | 75 | | | | 5*10 | 6*10 | | 53 | | | | 11 | | | | | 68 | | 48 | 6*10 |
| GOORB30-85 | GOORB30-85-N | GOORB30-85-B | 50 | | | | 85 | | | | 6*10 | 7*10 | | 58 | | | | 13.5 | | | | | 78 | | 58 | 7*10 |
| GOORB40-35 | GOORB40-35-N | GOORB40-35-B | 18 | Ø2.0 | | | 35 | 8 | 6 | 6.5 | / | 1*15 | | 29 | 6 | | 10 | 3 | | | 25 | 7.5 | 25 | | | 1*15 |
| GOORB40-50 | GOORB40-50-N | GOORB40-50-B | 30 | | | | 50 | | | | 1*15 | 1*25 | | 41 | | | 12.5 | 4.5 | | | | | 40 | | / | 1*25 |
| GOORB40-65 | GOORB40-65-N | GOORB40-65-B | 40 | | | | 65 | | | | 2*15 | | | 51 | | | 20 | 7 | | | | | 55 | | | 1*25 |
| GOORB40-80 | GOORB40-80-N | GOORB40-80-B | 50 | Ø3.0 | 40±0.1 | 21±0.1 | 80 | 7 | 8 | 5.5 | 3*15 | 2*25 | M3 | 61 | 7.5 | 17.5 | 15 | 9.5 | 15 | 12.5 | 25.5 | 7.25 | 70 | / | 40 | 2*25 |
| GOORB40-95 | GOORB40-95-N | GOORB40-95-B | 60 | | | | 95 | | | | 4*15 | | | 71 | | | 22.5 | 12 | | | | | 85 | | 55 | 2*25 |
| GOORB40-110 | GOORB40-110-N | GOORB40-110-B | 70 | | | | 110 | | | | 5*15 | 3*25 | | 81 | | | 17.5 | 14.5 | | | | | 100 | | 70 | 3*25 |
| GOORB40-125 | GOORB40-125-N | GOORB40-125-B | 80 | | | | 125 | | | | 6*15 | | | 91 | | | 25 | 17 | | | | | 115 | | 85 | 3*25 |
| GOORB60-55 | GOORB60-55-N | GOORB60-55-B | 30 | | | | 55 | | | | / | 1*25 | | 44 | | | | 5.5 | | | | | 35 | | | 1*25 |
| GOORB60-80 | GOORB60-80-N | GOORB60-80-B | 45 | | | | 80 | | | | 1*25 | 2*25 | | 59 | | | | 10.5 | | | | | 60 | / | | 2*25 |
| GOORB60-105 | GOORB60-105-N | GOORB60-105-B | 60 | | | | 105 | | | | 2*25 | 3*25 | | 74 | | | | 15.5 | | | | | 85 | | | 3*25 |
| GOORB60-130 | GOORB60-130-N | GOORB60-130-B | 75 | Ø3.0 | 60±0.1 | 28±0.1 | 130 | 10.5 | 8 | 9 | 3*25 | 4*25 | M4 | 89 | 7.5 | 27.5 | 15 | 20.5 | 25 | 17.5 | 39 | 10.5 | 110 | | / | 4*25 |
| GOORB60-155 | GOORB60-155-N | GOORB60-155-B | 90 | | | | 155 | | | | 4*25 | 5*25 | | 104 | | | | 25.5 | | | | | 135 | 85 | | 5*25 |
| GOORB60-180 | GOORB60-180-N | GOORB60-180-B | 105 | | | | 180 | | | | 5*25 | 6*25 | | 119 | | | | 30.5 | | | | | 160 | 110 | | 6*25 |
| GOORB60-205 | GOORB60-205-N | GOORB60-205-B | 130 | | | | 205 | | | | 6*25 | 7*25 | | 144 | | | | 30.5 | | | | | 185 | 135 | 85 | 7*25 |

| Ordering Example : | GOORB | - | 30 | - | 25 | - | N |
|---|---|---|---|---|---|---|---|
| | B type table | | Table width | | Table length | | Antirust |

## GOORB / GOORB - N / GOORB - B

GOORB

GOORB-N

GOORB-B

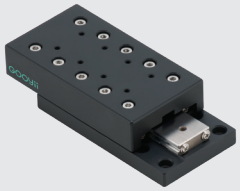

## Material Specification

| Component / Material / Model No. | Table | Rail | Retainer | Roller |
|---|---|---|---|---|
| GOORB | Aluminum alloy +black anodized | SUJ2 | SUS304 | SUJ2 |
| GOORB - N | S50C+Ni | SUJ2+Ni | SUS304 | SUJ2 |
| GOORB - B | S50C +phosphate | SUJ2 | SUS304 | SUJ2 |

GOORB-N No Surface finished to V-groove surface of the rail.

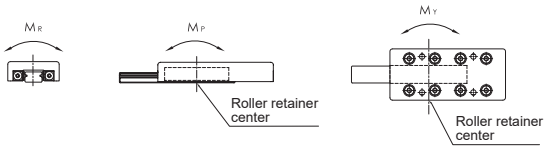


★ Each of load and torque changes oppositely in stroke variation

| Base Mounting Dimensions (mm) | | | | | | | | | | | | | Basic Dynamic Load Rating C(N) | Basic Static Load Rating Co(N) | Allow-Able Load Fu(N) | Static Rated Moment | | | Weight (kg) | | Table Moving Accuracy (μm) | |
|---|---|---|---|---|---|---|---|---|---|---|---|---|---|---|---|---|---|---|---|---|---|---|
| $Q_1$ | $Q_2$ | $Q_3$ | $Q_9$ | $W_5$ | $W_6$ | $W_9$ | $W_{10}$ | $d_1$ | $d_2$ | $d_4$ | $h_1$ | $h_2$ | | | | $M_R$ (N•m) | $M_P$ (N•m) | $M_Y$ (N•m) | Standard | Antirust | Center Parallelism | Side Parallelism |
| 3.5 | / | / | 7.5 | 22 | 4 | / | 15 | 2.55 | 4.1 | 4.1 | 2.5 | 6 | 379 | 576 | 192 | 2.6 | 1.2 | 1.4 | 0.04 | 0.09 | 2 | 4 |
| | | | | | | | | | | | | | 523 | 865 | 288 | 3.9 | 2.6 | 3.0 | 0.06 | 0.12 | | |
| | | | | | | | | | | | | | 657 | 1,153 | 384 | 5.2 | 4.6 | 5.2 | 0.07 | 0.16 | | |
| | | 13.5 | | | | | | | | | | | 783 | 1,441 | 480 | 6.5 | 7.2 | 7.9 | 0.09 | 0.19 | | 5 |
| | | | | | | | | | | | | | 903 | 1,729 | 576 | 7.8 | 10.4 | 11.2 | 0.10 | 0.23 | | |
| | | | | | | | | | | | | | 1,131 | 2,306 | 769 | 10.4 | 18.4 | 17.3 | 0.12 | 0.27 | | |
| | | | | | | | | | | | | | 1,240 | 2,594 | 865 | 11.7 | 23.3 | 22.0 | 0.14 | 0.30 | | |
| 5 | / | / | 10 | 30 | 5 | / | 20 | 3.5 | 6 | 6 | 3.5 | 7 | 895 | 1,170 | 390 | 7.0 | 3.1 | 3.9 | 0.10 | 0.20 | 2 | 4 |
| | | | | | | | | | | | 3.2 | 6 | 2,901 | 4,567 | 1,522 | 42.6 | 22.8 | 26.6 | 0.16 | 0.29 | | |
| | | | 17.5 | | | | | | | | | | 2,901 | 4,567 | 1,522 | 42.6 | 22.8 | 19.0 | 0.18 | 0.36 | | 5 |
| | | 20 | 10 | | | | | | | | | | 4,338 | 7,611 | 2,537 | 71.0 | 63.4 | 57.1 | 0.25 | 0.46 | | |
| | | | 17.5 | | | | | | | | | | 3,640 | 6,089 | 2,030 | 56.8 | 40.6 | 45.7 | 0.27 | 0.53 | | |
| | | | | | | | | | | | | | 5,005 | 9,133 | 3,044 | 85.2 | 91.3 | 98.9 | 0.34 | 0.63 | 3 | 6 |
| | | | 25 | | | | | | | | | | 5,005 | 9,133 | 3,044 | 85.2 | 91.3 | 83.7 | 0.36 | 0.69 | | |
| 10 | / | / | 15 | 40 | 10 | 17 | 21.5 | 4.5 | 7.5 | 7.5 | 4.5 | 9.5 | 2,901 | 4,567 | 1,522 | 42.6 | 22.8 | 26.6 | 0.31 | 0.65 | 2 | 5 |
| | | | | | | | | | | | | | 4,338 | 7,611 | 2,537 | 71.0 | 63.4 | 57.1 | 0.46 | 0.96 | | |
| | | | | | | | | | | | | | 5,646 | 10,655 | 3,552 | 99.5 | 124.3 | 115.4 | 0.61 | 1.27 | 3 | 6 |
| | | | | | | | | | | | | | 6,268 | 12,178 | 4,059 | 113.7 | 162.4 | 172.5 | 0.76 | 1.57 | | |
| | | | | | | | | | | | | | 7,462 | 15,222 | 5,074 | 142.1 | 253.7 | 266.4 | 0.90 | 1.87 | | |
| | 35 | | | | | | | | | | | | 8,603 | 18,266 | 6,089 | 170.5 | 365.3 | 350.1 | 1.05 | 2.18 | | 7 |
| | | 60 | | | | | | | | | | | 9,157 | 19,789 | 6,596 | 184.7 | 428.8 | 445.2 | 1.20 | 2.47 | | |

## GOORB / GOORB - N / GOORB - B

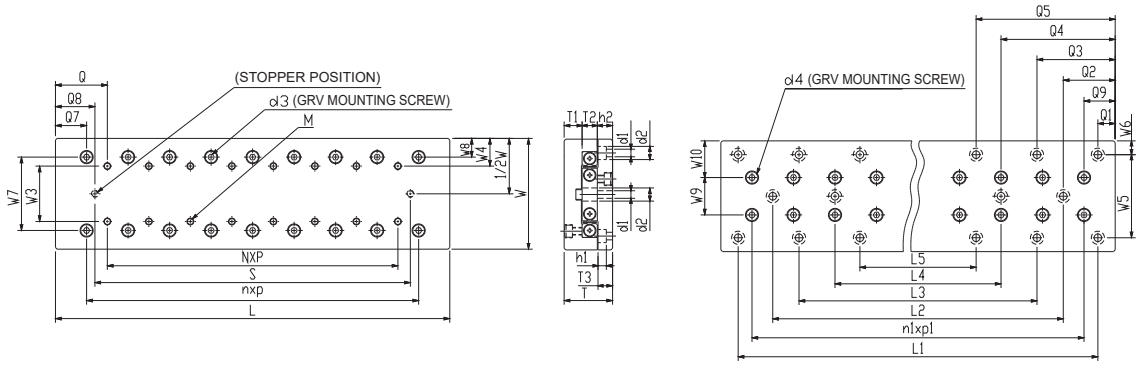


## Specification

| Model No. | | | Max. Stroke (mm) | Roller Dia. (mm) | Main Dimensions (mm) | | | | | | Table Mounting Dimensions (mm) | | | | | | | | | | | | | | | | | | | |
|---|---|---|---|---|---|---|---|---|---|---|---|---|---|---|---|---|---|---|---|---|---|---|---|---|---|---|---|---|---|---|
| Standard | Antirust | Black Coating | | | W | T | L | $T_1$ | $T_2$ | $T_3$ | N*P | n*p | M | S | $d_3$ | Q | $Q_7$ | $Q_8$ | $W_3$ | $W_4$ | $W_7$ | $W_8$ | $L_1$ | $L_2$ | $L_3$ | $L_4$ | $L_5$ | $n_1$*$p_1$ |
| GOORB80-85 | GOORB80-85-N | GOORB80-85-B | 50 | | | | 85 | | | | / | 1*40 | | 64 | | | | 10.5 | | | | | 40 | | | | | 1*40 |
| GOORB80-125 | GOORB80-125-N | GOORB80-125-B | 75 | | | | 125 | | | | 1*40 | 2*40 | | 89 | | | | 18 | | | | | 80 | | / | | | 2*40 |
| GOORB80-165 | GOORB80-165-N | GOORB80-165-B | 105 | | | | 165 | | | | 2*40 | 3*40 | | 119 | | | | 23 | | | | | 120 | | | | | 3*40 |
| GOORB80-205 | GOORB80-205-N | GOORB80-205-B | 135 | Ø4.0 | 80±0.1 | 35±0.1 | 205 | 13 | 11 | 10.5 | 3*40 | 4*40 | M5 | 149 | 9.5 | 42.5 | 22.5 | 28 | 40 | 20 | 53 | 13.5 | 160 | / | 80 | / | / | 4*40 |
| GOORB80-245 | GOORB80-245-N | GOORB80-245-B | 155 | | | | 245 | | | | 4*40 | 5*40 | | 169 | | | | 38 | | | | | 200 | | 120 | | | 5*40 |
| GOORB80-285 | GOORB80-285-N | GOORB80-285-B | 185 | | | | 285 | | | | 5*40 | 6*40 | | 199 | | | | 43 | | | | | 240 | | 160 | | | 6*40 |
| GOORB80-325 | GOORB80-325-N | GOORB80-325-B | 215 | | | | 325 | | | | 6*40 | 7*40 | | 229 | | | | 48 | | | | | 280 | | 200 | | 120 | 7*40 |
| GOORB100-110 | GOORB100-110-N | GOORB100-110-B | 60 | | | | 110 | | | | / | 1*50 | | 77 | | | | 16.5 | | | | | 90 | / | | | | 1*50 |
| GOORB100-160 | GOORB100-160-N | GOORB100-160-B | 95 | | | | 160 | | | | 1*50 | 2*50 | | 113 | | | | 23.5 | | | | | 140 | | | | | 2*50 |
| GOORB100-210 | GOORB100-210-N | GOORB100-210-B | 130 | | | | 210 | | | | 2*50 | 3*50 | | 148 | | | | 31 | | | | | 190 | 90 | / | | | 3*50 |
| GOORB100-260 | GOORB100-260-N | GOORB100-260-B | 165 | Ø6.0 | 100±0.1 | 45±0.1 | 260 | 16 | 15 | 13 | 3*50 | 4*50 | M6 | 183 | 11 | 55 | 30 | 38.5 | 50 | 25 | 64 | 18 | 240 | 140 | | / | / | 4*50 |
| GOORB100-310 | GOORB100-310-N | GOORB100-310-B | 200 | | | | 310 | | | | 4*50 | 5*50 | | 218 | | | | 46 | | | | | 290 | 190 | | | | 5*50 |
| GOORB100-360 | GOORB100-360-N | GOORB100-360-B | 235 | | | | 360 | | | | 5*50 | 6*50 | | 253 | | | | 53.5 | | | | | 340 | 240 | 140 | | | 6*50 |
| GOORB100-410 | GOORB100-410-N | GOORB100-410-B | 265 | | | | 410 | | | | 6*50 | 7*50 | | 283 | | | | 63.5 | | | | | 390 | 290 | 190 | | | 7*50 |
| GOORB100-510 | GOORB100-510-N | GOORB100-510-B | 350 | | | | 450 | | | | 7*50 | 8*50 | | 390 | | | | 60 | | | | | 450 | 390 | 290 | | | 8*50 |
| GOORB145-210 | GOORB145-210-N | GOORB145-210-B | 130 | | | | 210 | | | | / | 1*100 | | 156 | | | | 27 | | | | | 100 | / | | | | 1*100 |
| GOORB145-310 | GOORB145-310-N | GOORB145-310-B | 180 | | | | 310 | | | | 1*100 | 2*100 | | 206 | | | | 52 | | | | | 200 | | | | | 2*100 |
| GOORB145-410 | GOORB145-410-N | GOORB145-410-B | 350 | Ø9.0 | 145±0.1 | 60±0.1 | 410 | 21 | 22 | 16 | 2*100 | 3*100 | M8 | 376 | 14 | 105 | 55 | | 85 | 30 | 98 | 23.5 | 300 | 100 | / | / | / | 3*100 |
| GOORB145-510 | GOORB145-510-N | GOORB145-510-B | 450 | | | | 510 | | | | 3*100 | 4*100 | | 476 | | | | 17 | | | | | 400 | 200 | | | | 4*100 |
| GOORB145-610 | GOORB145-610-N | GOORB145-610-B | 550 | | | | 610 | | | | 4*100 | 5*100 | | 576 | | | | | | | | | 500 | 300 | | | | 5*100 |



| Ordering Example : | GOORB | - | 30 | - | 25 | - | N |
|---|---|---|---|---|---|---|---|
| | B type table | | Table width | | Table length | | Antirust |

## GOORB / GOORB - N / GOORB - B

GOORB

GOORB-N

GOORB-B

## Material Specification

| Component / Material / Model No. | Table | Rail | Retainer | Roller |
|---|---|---|---|---|
| GOORB | Aluminum alloy +black anodized | SUJ2 | SUS304 | SUJ2 |
| GOORB - N | S50C+Ni | SUJ2+Ni | SUS304 | SUJ2 |
| GOORB - B | S50C +phosphate | SUJ2 | SUS304 | SUJ2 |

GOORB-N No Surface finished to V-groove surface of the rail.

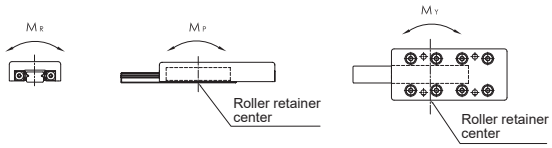


★ Each of load and torque changes oppositely in stroke variation

| Base Mounting Dimensions (mm) | | | | | | | | | | | | | | | Basic Dynamic Load Rating C(N) | Basic Static Load Rating Co(N) | Allow-Able Load Fu(N) | Static Rated Moment | | | Weight (kg) | | Table Moving Accuracy (μm) | |
|---|---|---|---|---|---|---|---|---|---|---|---|---|---|---|---|---|---|---|---|---|---|---|---|---|
| $Q_1$ | $Q_2$ | $Q_3$ | $Q_4$ | $Q_5$ | $Q_9$ | $W_5$ | $W_6$ | $W_9$ | $W_{10}$ | $d_1$ | $d_2$ | $d_4$ | $h_1$ | $h_2$ | | | | $M_R$ (N•m) | $M_P$ (N•m) | $M_Y$ (N•m) | Standard | Antirust | Center Parallelism | Side Parallelism |
| 22.5 | / | / | / | / | 22.5 | 60 | 10 | 27 | 26.5 | 5.5 | 9.5 | 9.5 | 6 | 11 | 6,617 | 9,357 | 3,119 | 124.8 | 87.3 | 76.4 | 0.84 | 1.72 | 2 | 5 |
| | | | | | | | | | | | | | | | 9,097 | 14,035 | 4,678 | 187.1 | 196.5 | 180.1 | 1.25 | 2.55 | 3 | 6 |
| | | | | | | | | | | | | | | | 10,264 | 16,375 | 5,458 | 218.3 | 267.5 | 286.6 | 1.65 | 3.37 | | 7 |
| | | 62.5 | | | | | | | | | | | | | 12,492 | 21,053 | 7,018 | 280.7 | 442.1 | 466.7 | 2.06 | 4.18 | | |
| | | | | | | | | | | | | | | | 14,612 | 25,732 | 8,577 | 343.1 | 660.4 | 690.5 | 2.46 | 5.00 | | |
| | | | | | | | | | | | | | | | 16,646 | 30,410 | 10,137 | 405.5 | 922.4 | 957.9 | 2.87 | 5.83 | | |
| | | | | 102.5 | | | | | | | | | | | 18,612 | 35,089 | 11,696 | 467.8 | 1228.1 | 1187.2 | 3.27 | 6.64 | 4 | 8 |
| 10 | / | / | / | / | 30 | 60 | 20 | 26 | 37 | 7 | 11 | 11 | 6.5 | 14 | 13,923 | 21,053 | 7,018 | 315.8 | 252.6 | 221.1 | 1.72 | 3.51 | 3 | 6 |
| | | | | | | | | | | | | | | | 16,592 | 26,316 | 8,772 | 394.7 | 394.7 | 434.2 | 2.53 | 5.15 | | |
| | 60 | | | | | | | | | | | | | | 21,596 | 36,842 | 12,281 | 552.6 | 773.7 | 828.9 | 3.34 | 6.79 | | 7 |
| | | | | | | | | | | | | | | | 26,285 | 47,369 | 15,790 | 710.5 | 1279.0 | 1207.9 | 4.13 | 8.39 | | |
| | | | | | | | | | | | | | | | 30,744 | 57,895 | 19,298 | 868.4 | 1910.5 | 1823.7 | 4.95 | 10.04 | | |
| | | 110 | | | | | | | | | | | | | 35,024 | 68,421 | 22,807 | 1026.3 | 2668.4 | 2565.8 | 5.75 | 11.64 | 4 | 8 |
| | | | | | | | | | | | | | | | 39,160 | 78,948 | 26,316 | 1184.2 | 3552.6 | 3434.2 | 6.56 | 13.28 | | |
| | | | | | | | | | | | | | | | 45,141 | 84,600 | 28,200 | 1269.0 | 4568.4 | 4441.5 | 8.17 | 16.52 | | |
| 55 | / | / | / | / | 55 | 90 | 27.5 | 46 | 49.5 | 9 | 14 | 14 | 8.5 | 17.5 | 46,991 | 72,741 | 24,247 | 1745.8 | 1697.3 | 1527.6 | 6.75 | 13.23 | 3 | 7 |
| | | | | | | | | | | | | | | | 61,165 | 101,838 | 33,946 | 2444.1 | 3326.7 | 3564.3 | 10.03 | 19.62 | | |
| | 155 | | | | | | | | | | | | | | 67,898 | 116,386 | 38,795 | 2793.3 | 4345.1 | 4073.5 | 13.21 | 25.88 | 4 | 8 |
| | | | | | | | | | | | | | | | 80,829 | 145,482 | 48,494 | 3491.6 | 6789.2 | 6449.7 | 16.48 | 32.26 | | |
| | | | | | | | | | | | | | | | 87,562 | 160,030 | 53,343 | 3840.8 | 7807.6 | 6958.9 | 19.75 | 38.64 | | |

## GOORC / GOORC - N / GOORC - B

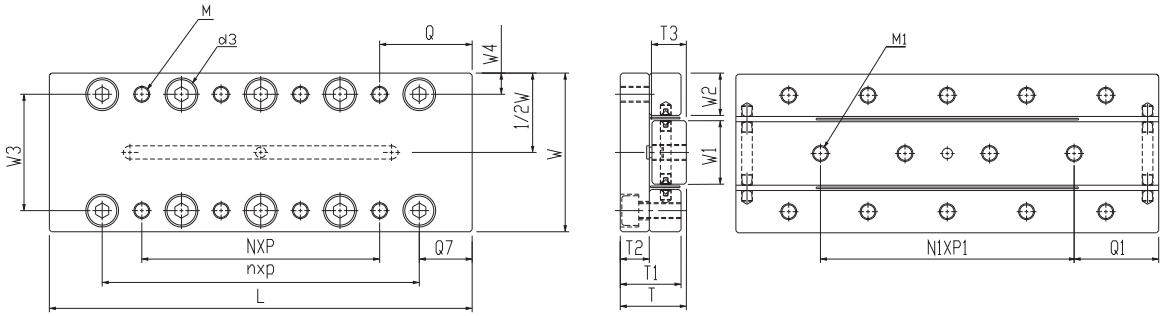


## Specification

| Model No. | | | Max. Stroke (mm) | Roller Dia. (mm) | Main Dimensions (mm) | | | Table Mounting Dimensions (mm) | | | | | | | | | |
|---|---|---|---|---|---|---|---|---|---|---|---|---|---|---|---|---|---|
| Standard | Antirust | Black Coating | | | W | T | L | $W_3$ | $W_4$ | N*P | Q | M | n*p | $Q_7$ | $d_3$ | $T_1$ | $T_2$ |
| GOORC20-25 | GOORC20-25-N | GOORC20-25-B | 12 | Ø1.5 | 20±0.1 | 8±0.1 | 25 | 14 | 3 | 1*18 | 3.5 | M2.5 | 1*10 | 7.5 | 4.1 | 7.5 | 3.5 |
| GOORC20-35 | GOORC20-35-N | GOORC20-35-B | 18 | | | | 35 | | | 1*28 | | | 2*10 | | | | |
| GOORC20-45 | GOORC20-45-N | GOORC20-45-B | 25 | | | | 45 | | | 1*20 | 12.5 | | 3*10 | | | | |
| GOORC20-55 | GOORC20-55-N | GOORC20-55-B | 32 | | | | 55 | | | 1*30 | | | 4*10 | | | | |
| GOORC30-65 | GOORC30-65-N | GOORC30-65-B | 40 | Ø2.0 | 30±0.1 | 12±0.1 | 65 | 22 | 4 | 1*30 | 17.5 | M3 | 3*15 | 10 | 6 | 11.5 | 5.5 |
| GOORC30-80 | GOORC30-80-N | GOORC30-80-B | 50 | | | | 80 | | | 1*45 | | | 4*15 | | | | |
| GOORC30-95 | GOORC30-95-N | GOORC30-95-B | 60 | | | | 95 | | | 2*30 | | | 5*15 | | | | |
| GOORC40-105 | GOORC40-105-N | GOORC40-105-B | 60 | Ø3.0 | 40±0.1 | 16±0.1 | 105 | 30 | 5 | 1*50 | 27.5 | M4 | 3*25 | 15 | 7.5 | 15.5 | 7.5 |
| GOORC40-130 | GOORC40-130-N | GOORC40-130-B | 75 | | | | 130 | | | 1*75 | | | 4*25 | | | | |
| GOORC40-155 | GOORC40-155-N | GOORC40-155-B | 90 | | | | 155 | | | 2*50 | | | 5*25 | | | | |

| Ordering Example : | GOORC | - | 30 | - | 25 | - | N |
|---|---|---|---|---|---|---|---|
| | C type table | | Table width | | Table length | | Antirust |

## GOORC / GOORC - N / GOORC - B

GOORC

GOORC-N

GOORC-B

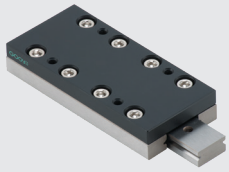

## Material Specification

| Component / Material / Model No. | Table | Rail | Retainer | Roller |
|---|---|---|---|---|
| GOORC | Aluminum alloy +black anodized | SUJ2 | SUS304 | SUJ2 |
| GOORC - N | S50C+Ni | SUJ2+Ni | SUS304 | SUJ2 |
| GOORC - B | S50C +phosphate | SUJ2 | SUS304 | SUJ2 |

GOORC-N No Surface finished to V-groove surface of the rail.

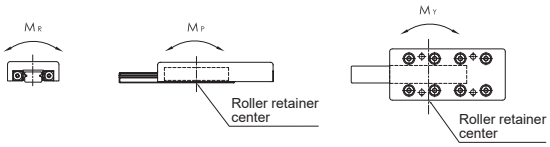


★ Each of load and torque changes oppositely in stroke variation

| Base Mounting Dimensions (mm) | | | | | | Basic Dynamic Load Rating C(N) | Basic Static Load Rating Co(N) | Allow-Able Load Fu(N) | Static Rated Moment | | | Weight (kg) | | Table Moving Accuracy (μm) | |
|---|---|---|---|---|---|---|---|---|---|---|---|---|---|---|---|
| $W_1$ | $W_2$ | $N_1$*$P_1$ | $Q_1$ | $M_1$ | $T_3$ | | | | $M_R$ (N•m) | $M_P$ (N•m) | $M_Y$ (N•m) | Standard | Antirust | Center Parallelism | Side Parallelism |
| 7 | 6.5 | 2*7.5 | 5 | M2.5 | 4 | 523 | 865 | 288 | 2.2 | 2.6 | 2.2 | 0.02 | 0.03 | 2 | 4 |
| | | 2*10 | 7.5 | | | 657 | 1153 | 384 | 3.0 | 4.6 | 5.2 | 0.03 | 0.04 | | |
| | | 3*10 | | | | 783 | 1441 | 480 | 3.7 | 7.2 | 7.9 | 0.03 | 0.05 | | |
| | | 4*10 | | | | 903 | 1729 | 576 | 4.4 | 10.4 | 11.2 | 0.04 | 0.06 | | |
| 12 | 9 | 3*15 | 10 | M3 | 6 | 1849 | 2924 | 975 | 12.7 | 19.5 | 21.4 | 0.11 | 0.16 | | 5 |
| | | 4*15 | | | | 2407 | 4093 | 1364 | 17.7 | 38.2 | 35.5 | 0.13 | 0.20 | | |
| | | 5*15 | | | | 2672 | 4678 | 1559 | 20.3 | 49.9 | 46.8 | 0.16 | 0.24 | | |
| 16 | 12 | 3*25 | 15 | M4 | 8 | 5646 | 10655 | 3552 | 61.8 | 124.3 | 133.2 | 0.31 | 0.48 | 3 | 6 |
| | | 4*25 | | | | 6872 | 13700 | 4567 | 79.5 | 205.5 | 194.1 | 0.39 | 0.59 | | |
| | | 5*25 | | | | 8038 | 16744 | 5581 | 97.1 | 307.0 | 293.0 | 0.46 | 0.70 | | |

## GOORM / GOORM - N / GOORM - B

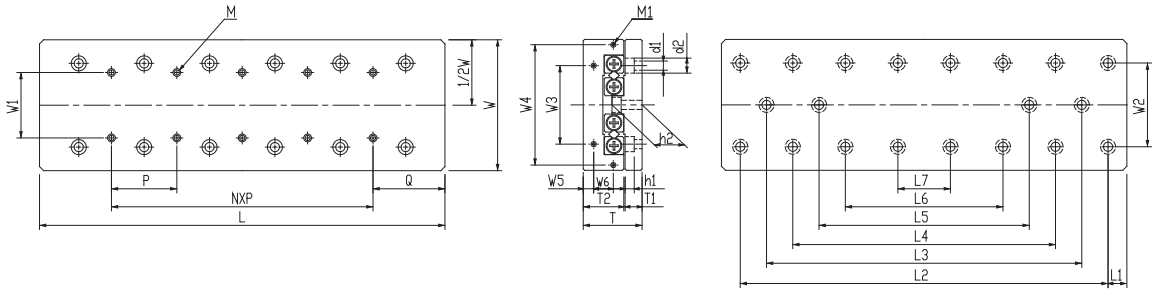


## Specification

| Model No. | | | Max. Stroke (mm) | Roller Dia. (mm) | Main Dimensions (mm) | | | | Table Mounting Dimensions (mm) | | | | External Connection Mountion Dimensions (mm) | | | | | | | | | |
|---|---|---|---|---|---|---|---|---|---|---|---|---|---|---|---|---|---|---|---|---|---|---|
| Standard | Antirust | Black Coating | | | W | T | $T_2$ | L | $W_1$ | M | Q | N*P | $W_3$ | $W_4$ | $W_5$ | $W_6$ | $M_1$ | $W_2$ | $d_1$ | $d_2$ | $h_1$ | $T_1$ |
| GOORM30-25 | GOORM30-25-N | GOORM30-25-B | 12 | | | | | 25 | | | | / | | | | | | | | | | |
| GOORM30-35 | GOORM30-35-N | GOORM30-35-B | 18 | | | | | 35 | | | | 1*10 | | | | | | | | | | |
| GOORM30-45 | GOORM30-45-N | GOORM30-45-B | 25 | | | | | 45 | | | | 2*10 | | | | | | | | | | |
| GOORM30-55 | GOORM30-55-N | GOORM30-55-B | 32 | Ø1.5 | 30±0.1 | 17±0.1 | 11 | 55 | 10 | M2*4L | 12.5 | 3*10 | 12 | / | 2.5 | / | M2*6L | 22 | 2.5 | 4.5 | 2.5 | 5.5 |
| GOORM30-65 | GOORM30-65-N | GOORM30-65-B | 40 | | | | | 65 | | | | 4*10 | | | | | | | | | | |
| GOORM30-75 | GOORM30-75-N | GOORM30-75-B | 45 | | | | | 75 | | | | 5*10 | | | | | | | | | | |
| GOORM30-85 | GOORM30-85-N | GOORM30-85-B | 50 | | | | | 85 | | | | 6*10 | | | | | | | | | | |
| GOORM40-35 | GOORM40-35-N | GOORM40-35-B | 18 | | | | | 35 | | | | / | | | | | | | | | | |
| GOORM40-50 | GOORM40-50-N | GOORM40-50-B | 30 | | | | | 50 | | | | 1*15 | | | | | | | | | | |
| GOORM40-65 | GOORM40-65-N | GOORM40-65-B | 40 | | | | | 65 | | | | 2*15 | | | | | | | | | | |
| GOORM40-80 | GOORM40-80-N | GOORM40-80-B | 50 | | | | | 80 | | | | 3*15 | | | | | | | | | | |
| GOORM40-95 | GOORM40-95-N | GOORM40-95-B | 60 | | | | | 95 | | | | 4*15 | | | | | | | | | | |
| GOORM40-110 | GOORM40-110-N | GOORM40-110-B | 70 | Ø2.0 | 40±0.1 | 21±0.1 | 14 | 110 | 15 | M3*6L | 17.5 | 5*15 | 16 | / | 3.4 | / | M2*6L | 30 | 3.5 | 6.5 | 3.5 | 6.5 |
| GOORM40-125 | GOORM40-125-N | GOORM40-125-B | 80 | | | | | 125 | | | | 6*15 | | | | | | | | | | |
| GOORM40-140 | GOORM40-140-N | GOORM40-140-B | 90 | | | | | 140 | | | | 7*15 | | | | | | | | | | |
| GOORM40-155 | GOORM40-155-N | GOORM40-155-B | 100 | | | | | 155 | | | | 8*15 | | | | | | | | | | |
| GOORM40-170 | GOORM40-170-N | GOORM40-170-B | 110 | | | | | 170 | | | | 9*15 | | | | | | | | | | |
| GOORM40-185 | GOORM40-185-N | GOORM40-185-B | 120 | | | | | 185 | | | | 10*15 | | | | | | | | | | |
| GOORM60-55 | GOORM60-55-N | GOORM60-55-B | 30 | | | | | 55 | | | | / | | | | | | | | | | |
| GOORM60-80 | GOORM60-80-N | GOORM60-80-B | 45 | | | | | 80 | | | | 1*25 | | | | | | | | | | |
| GOORM60-105 | GOORM60-105-N | GOORM60-105-B | 60 | | | | | 105 | | | | 2*25 | | | | | | | | | | |
| GOORM60-130 | GOORM60-130-N | GOORM60-130-B | 75 | | | | | 130 | | | | 3*25 | | | | | | | | | | |
| GOORM60-155 | GOORM60-155-N | GOORM60-155-B | 90 | | | | | 155 | | | | 4*25 | | | | | | | | | | |
| GOORM60-180 | GOORM60-180-N | GOORM60-180-B | 105 | Ø3.0 | 60±0.1 | 28±0.1 | 18.5 | 180 | 25 | M4*8L | 27.5 | 5*25 | 40 | / | 5.5 | / | M3*6L | 40 | 4.5 | 8 | 4.5 | 9 |
| GOORM60-205 | GOORM60-205-N | GOORM60-205-B | 130 | | | | | 205 | | | | 6*25 | | | | | | | | | | |
| GOORM60-230 | GOORM60-230-N | GOORM60-230-B | 155 | | | | | 230 | | | | 7*25 | | | | | | | | | | |
| GOORM60-255 | GOORM60-255-N | GOORM60-255-B | 180 | | | | | 255 | | | | 8*25 | | | | | | | | | | |
| GOORM60-280 | GOORM60-280-N | GOORM60-280-B | 205 | | | | | 280 | | | | 9*25 | | | | | | | | | | |
| GOORM60-305 | GOORM60-305-N | GOORM60-305-B | 230 | | | | | 305 | | | | 10*25 | | | | | | | | | | |

| Ordering Example : | GOORM | - | 30 | - | 25 | - | N |
|---|---|---|---|---|---|---|---|
| | M type table | | Table width | | Table length | | Antirust |

## GOORM / GOORM - N / GOORM - B

GOORM

GOORM-N

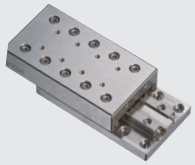

GOORM-B

## Material Specification

| Component / Material / Model No. | Table | Rail | Retainer | Roller |
|---|---|---|---|---|
| GOORM | Aluminum alloy +black anodized | SUJ2 | SUS304 | SUJ2 |
| GOORM - N | S50C+Ni | SUJ2+Ni | SUS304 | SUJ2 |
| GOORM - B | S50C +phosphate | SUJ2 | SUS304 | SUJ2 |

GOORM-N No Surface finished to V-groove surface of the rail.

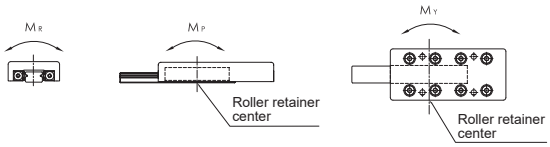


★ Each of load and torque changes oppositely in stroke variation

| Base Mounting Dimensions (mm) | | | | | | | | Basic Dynamic Load Rating C(N) | Basic Static Load Rating Co(N) | Allow-Able Load Fu(N) | Static Rated Moment | | | Weight (kg) | | Table Moving Accuracy (μm) | |
|---|---|---|---|---|---|---|---|---|---|---|---|---|---|---|---|---|---|
| $h_2$ | $L_1$ | $L_2$ | $L_3$ | $L_4$ | $L_5$ | $L_6$ | $L_7$ | | | | $M_R$ (N·m) | $M_P$ (N·m) | $M_Y$ (N·m) | Standard | Antirust | Center Parallelism | Side Parallelism |
| 9 | 3.5 | 18 | / | / | / | / | / | 379 | 576 | 192 | 2.6 | 1.2 | 1.4 | 0.04 | 0.09 | 2 | 4 |
| | | 28 | | | | | | 523 | 865 | 288 | 3.9 | 2.6 | 3.0 | 0.05 | 0.12 | | |
| | | 38 | | | | | | 657 | 1,153 | 384 | 5.2 | 4.6 | 5.2 | 0.07 | 0.16 | | |
| | | 48 | | 28 | | | | 783 | 1,441 | 480 | 6.5 | 7.2 | 7.9 | 0.08 | 0.19 | | 5 |
| | | 58 | | 38 | | | | 903 | 1,729 | 576 | 7.8 | 10.4 | 11.2 | 0.10 | 0.23 | | |
| | | 68 | | 48 | | | | 1,131 | 2,306 | 769 | 10.4 | 18.4 | 17.3 | 0.12 | 0.27 | | |
| | | 78 | | 58 | | | | 1,240 | 2,594 | 865 | 11.7 | 23.3 | 22.0 | 0.13 | 0.30 | | |
| 10.9 | 5 | 25 | / | / | / | / | / | 895 | 1,170 | 390 | 7.0 | 3.1 | 3.9 | 0.09 | 0.20 | 2 | 4 |
| | | 40 | | | | | | 1,552 | 2,339 | 780 | 14.0 | 12.5 | 10.9 | 0.13 | 0.29 | | |
| | | 55 | | | | | | 1,849 | 2,924 | 975 | 17.5 | 19.5 | 17.5 | 0.17 | 0.38 | | 5 |
| | | 70 | | 40 | | | | 2,134 | 3,509 | 1,170 | 21.1 | 28.1 | 30.4 | 0.21 | 0.46 | | |
| | | 85 | | 55 | | | | 2,407 | 4,093 | 1,364 | 24.6 | 38.2 | 40.9 | 0.25 | 0.55 | | |
| | | 100 | | 70 | | | | 2,930 | 5,263 | 1,754 | 31.6 | 63.2 | 59.6 | 0.30 | 0.64 | 3 | 6 |
| | | 115 | | 85 | | | | 3,181 | 5,848 | 1,949 | 35.1 | 78.0 | 74.1 | 0.34 | 0.73 | | |
| | | 130 | | 100 | | 70 | | 3,427 | 6,433 | 2,144 | 38.6 | 94.3 | 98.6 | 0.38 | 0.82 | | |
| | | 145 | | 115 | | 85 | | 3,668 | 7,017 | 2,339 | 42.1 | 112.3 | 117.0 | 0.42 | 0.91 | | |
| | | 160 | | 130 | | 100 | | 4,136 | 8,187 | 2,729 | 49.1 | 152.8 | 147.4 | 0.46 | 1.00 | | 7 |
| | | 175 | | 145 | | 115 | 85 | 4,365 | 8,772 | 2,924 | 52.6 | 175.4 | 169.6 | 0.50 | 1.08 | | |
| 15 | 10 | 35 | / | / | / | / | / | 2,901 | 4,567 | 1,522 | 42.6 | 22.8 | 26.6 | 0.29 | 0.66 | 2 | 5 |
| | | 60 | | | | | | 4,338 | 7,611 | 2,537 | 71.0 | 63.4 | 57.1 | 0.43 | 0.96 | | |
| | | 85 | | | | | | 5,646 | 10,655 | 3,552 | 99.5 | 124.3 | 115.4 | 0.57 | 1.26 | 3 | 6 |
| | | 110 | | | | | | 6,268 | 12,178 | 4,059 | 113.7 | 162.4 | 172.5 | 0.71 | 1.57 | | |
| | | 135 | 85 | | | | | 7,462 | 15,222 | 5,074 | 142.1 | 253.7 | 266.4 | 0.84 | 1.87 | | |
| | | 160 | 110 | | | | | 8,603 | 18,266 | 6,089 | 170.5 | 365.3 | 350.1 | 0.98 | 2.17 | | 7 |
| | | 185 | 135 | 85 | | | | 9,157 | 19,789 | 6,596 | 184.7 | 428.8 | 445.2 | 1.12 | 2.47 | | |
| | | 210 | 160 | 110 | | | | 9,702 | 21,311 | 7,104 | 198.9 | 497.3 | 515.0 | 1.25 | 2.77 | | |
| | | 235 | 185 | 135 | | | | 10,767 | 24,355 | 8,118 | 227.3 | 649.5 | 629.2 | 1.39 | 3.07 | | |
| | | 260 | 210 | 160 | 110 | | | 11,288 | 25,877 | 8,626 | 241.5 | 733.2 | 711.6 | 1.53 | 3.37 | | |
| | | 285 | 235 | 185 | 135 | | | 11,802 | 27,400 | 9,133 | 255.7 | 822.0 | 844.8 | 1.66 | 3.68 | | |

## GOORM / GOORM - N / GOORM - B

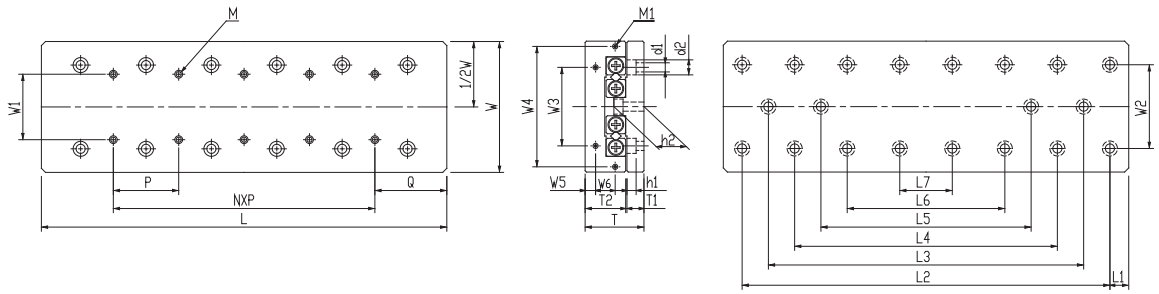


## Specification

| Model No. | | | Max. Stroke (mm) | Roller Dia. (mm) | Main Dimensions (mm) | | | | Table Mounting Dimensions (mm) | | | | External Connection Mountion Dimensions (mm) | | | | | | | | | |
|---|---|---|---|---|---|---|---|---|---|---|---|---|---|---|---|---|---|---|---|---|---|---|
| Standard | Antirust | Black Coating | | | W | T | $T_2$ | L | $W_1$ | M | Q | N*P | $W_3$ | $W_4$ | $W_5$ | $W_6$ | $M_1$ | $W_2$ | $d_1$ | $d_2$ | $h_1$ | $T_1$ |
| GOORM80-85 | GOORM80-85-N | GOORM80-85-B | 50 | 4.0 | 80±0.1 | 35±0.1 | 24 | 85 | 40 | M5*10L | 42.5 | / | 55 | / | 6.5 | / | M3*6L | 55 | 5.5 | 10 | 5.4 | 10.5 |
| GOORM80-125 | GOORM80-125-N | GOORM80-125-B | 75 | | | | | 125 | | | | 1*40 | | | | | | | | | | |
| GOORM80-165 | GOORM80-165-N | GOORM80-165-B | 105 | | | | | 165 | | | | 2*40 | | | | | | | | | | |
| GOORM80-205 | GOORM80-205-N | GOORM80-205-B | 130 | | | | | 205 | | | | 3*40 | | | | | | | | | | |
| GOORM80-245 | GOORM80-245-N | GOORM80-245-B | 155 | | | | | 245 | | | | 4*40 | | | | | | | | | | |
| GOORM80-285 | GOORM80-285-N | GOORM80-285-B | 185 | | | | | 285 | | | | 5*40 | | | | | | | | | | |
| GOORM80-325 | GOORM80-325-N | GOORM80-325-B | 210 | | | | | 325 | | | | 6*40 | | | | | | | | | | |
| GOORM80-365 | GOORM80-365-N | GOORM80-365-B | 235 | | | | | 365 | | | | 7*40 | | | | | | | | | | |
| GOORM80-405 | GOORM80-405-N | GOORM80-405-B | 265 | | | | | 405 | | | | 8*40 | | | | | | | | | | |
| GOORM100-110 | GOORM100-110-N | GOORM100-110-B | 60 | 6.0 | 100±0.1 | 45±0.1 | 31 | 110 | 50 | M6*12L | 55 | / | 60 | 92 | 8 | 15 | M4*8L | 60 | 7 | 11.5 | 7 | 13 |
| GOORM100-160 | GOORM100-160-N | GOORM100-160-B | 95 | | | | | 160 | | | | 1*50 | | | | | | | | | | |
| GOORM100-210 | GOORM100-210-N | GOORM100-210-B | 130 | | | | | 210 | | | | 2*50 | | | | | | | | | | |
| GOORM100-260 | GOORM100-260-N | GOORM100-260-B | 165 | | | | | 260 | | | | 3*50 | | | | | | | | | | |
| GOORM100-310 | GOORM100-310-N | GOORM100-310-B | 200 | | | | | 310 | | | | 4*50 | | | | | | | | | | |
| GOORM100-360 | GOORM100-360-N | GOORM100-360-B | 235 | | | | | 360 | | | | 5*50 | | | | | | | | | | |
| GOORM100-410 | GOORM100-410-N | GOORM100-410-B | 265 | | | | | 410 | | | | 6*50 | | | | | | | | | | |
| GOORM100-460 | GOORM100-460-N | GOORM100-460-B | 300 | | | | | 460 | | | | 7*50 | | | | | | | | | | |
| GOORM100-510 | GOORM100-510-N | GOORM100-510-B | 335 | | | | | 510 | | | | 8*50 | | | | | | | | | | |

| Ordering Example : | GOORM | - | 30 | - | 25 | - | N |
|---|---|---|---|---|---|---|---|
| | M type table | | Table width | | Table length | | Antirust |

## GOORM / GOORM - N / GOORM - B

GOORM

GOORM-N

GOORM-B

## Material Specification

| Component / Material / Model No. | Table | Rail | Retainer | Roller |
|---|---|---|---|---|
| GOORM | Aluminum alloy +black anodized | SUJ2 | SUS304 | SUJ2 |
| GOORM - N | S50C+Ni | SUJ2+Ni | SUS304 | SUJ2 |
| GOORM - B | S50C +phosphate | SUJ2 | SUS304 | SUJ2 |

GOORM-N No Surface finished to V-groove surface of the rail.

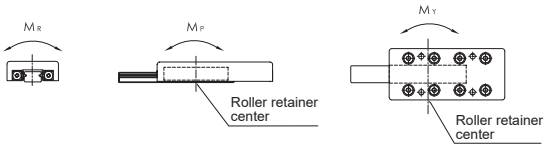


★ Each of load and torque changes oppositely in stroke variation

| Base Mounting Dimensions (mm) | | | | | | | | Basic Dynamic Load Rating C(N) | Basic Static Load Rating Co(N) | Allow-Able Load Fu(N) | Static Rated Moment | | | Weight (kg) | | Table Moving Accuracy (μm) | |
|---|---|---|---|---|---|---|---|---|---|---|---|---|---|---|---|---|---|
| $h_2$ | $L_1$ | $L_2$ | $L_3$ | $L_4$ | $L_5$ | $L_6$ | $L_7$ | | | | $M_R$ (N•m) | $M_P$ (N•m) | $M_Y$ (N•m) | Standard | Antirust | Center Parallelism | Side Parallelism |
| 10.5 | 10.5 | 65 | / | / | / | / | / | 6,617 | 9,357 | 3,119 | 124.8 | 87.3 | 76.4 | 0.76 | 1.69 | 2 | 5 |
| | | 105 | | | | | | 9,097 | 14,035 | 4,678 | 187.1 | 196.5 | 180.1 | 1.12 | 2.50 | 3 | 6 |
| | | 145 | | | | | | 10,264 | 16,375 | 5,458 | 218.3 | 267.5 | 286.6 | 1.48 | 3.31 | | 7 |
| | | 185 | 105 | | | | | 12,492 | 21,053 | 7,018 | 280.7 | 442.1 | 466.7 | 1.84 | 4.11 | | |
| | | 225 | 145 | | | | | 14,612 | 25,732 | 8,577 | 343.1 | 660.4 | 690.5 | 2.20 | 4.91 | | |
| | | 265 | 185 | | | | | 16,646 | 30,410 | 10,137 | 405.5 | 922.4 | 957.9 | 2.56 | 5.72 | | |
| | | 305 | 225 | 145 | | | | 18,612 | 35,089 | 11,696 | 467.8 | 1228.1 | 1269.0 | 2.92 | 6.51 | 4 | 8 |
| | | 345 | 265 | 185 | | | | 20,519 | 39,767 | 13,256 | 530.2 | 1577.4 | 1623.8 | 3.28 | 7.32 | | |
| | | 385 | 305 | 225 | | | | 22,377 | 44,445 | 14,815 | 592.6 | 1970.4 | 1918.6 | 3.65 | 8.13 | | |
| 23 | 10 | 90 | / | / | / | / | / | 13,923 | 21,053 | 7,018 | 315.8 | 252.6 | 221.1 | 1.60 | 3.48 | 3 | 6 |
| | | 140 | | | | | | 16,592 | 26,316 | 8,772 | 394.7 | 394.7 | 434.2 | 2.36 | 5.10 | | |
| | | 190 | 90 | | | | | 21,596 | 36,842 | 12,281 | 552.6 | 773.7 | 828.9 | 3.11 | 6.70 | | 7 |
| | | 240 | 140 | | | | | 26,285 | 47,369 | 15,790 | 710.5 | 1279.0 | 1207.9 | 3.86 | 8.32 | | |
| | | 290 | 190 | | | | | 30,744 | 57,895 | 19,298 | 868.4 | 1910.5 | 1823.7 | 4.62 | 9.94 | | |
| | | 340 | 240 | 140 | | | | 35,024 | 68,421 | 22,807 | 1026.3 | 2688.4 | 2565.8 | 5.36 | 11.53 | 4 | 8 |
| | | 390 | 290 | 190 | | | | 39,160 | 78,948 | 26,316 | 1184.2 | 3552.6 | 3434.2 | 6.12 | 13.15 | | |
| | | 440 | 340 | 240 | | | | 41,181 | 84,211 | 28,070 | 1263.2 | 4042.1 | 4168.4 | 6.87 | 14.76 | | |
| | | 490 | 390 | 290 | 190 | | | 45,141 | 94,737 | 31,579 | 1421.1 | 5115.8 | 5257.9 | 7.62 | 16.36 | | |

## GOORH / GOORH - N / GOORH - B

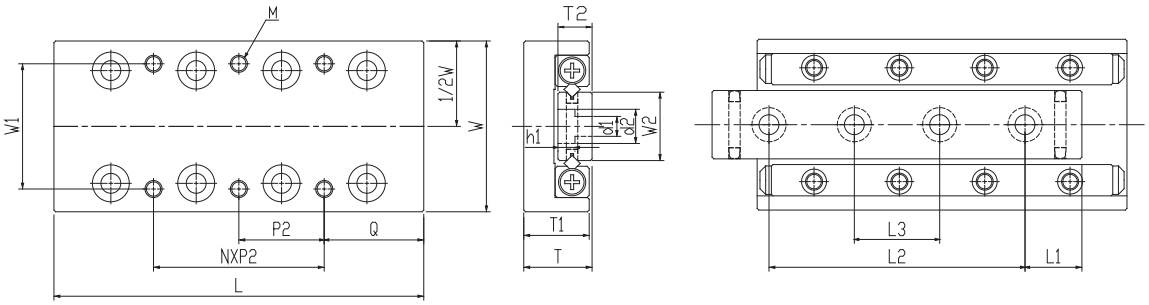


## Specification

| Model No. | | | Max. Stroke (mm) | Roller Dia. (mm) | Main Dimensions (mm) | | | | | | Table Mounting Dimensions (mm) | | | | | |
|---|---|---|---|---|---|---|---|---|---|---|---|---|---|---|---|---|
| Standard | Antirust | Black Coating | | | W | T | L | $T_1$ | $T_2$ | $W_2$ | $W_1$ | M | Q | N*$P_2$ | $d_1$ | $d_2$ |
| GOORH20-25 | GOORH20-25-N | GOORH20-25-B | 12 | Ø1.5 | 20±0.1 | 8±0.1 | 25 | 7.5 | 4 | 6.6 | 14 | M2.5*3.5L | 3.5 | 1*18 | 2.5 | 4.1 |
| GOORH20-35 | GOORH20-35-N | GOORH20-35-B | 18 | | | | 35 | | | | | | | 1*28 | | |
| GOORH20-45 | GOORH20-45-N | GOORH20-45-B | 25 | | | | 45 | | | | | | 12.5 | 1*20 | | |
| GOORH20-55 | GOORH20-55-N | GOORH20-55-B | 32 | | | | 55 | | | | | | | 1*30 | | |
| GOORH20-65 | GOORH20-65-N | GOORH20-65-B | 40 | | | | 65 | | | | | | | 2*20 | | |
| GOORH20-75 | GOORH20-75-N | GOORH20-75-B | 45 | | | | 75 | | | | | | 22.5 | 1*30 | | |
| GOORH20-85 | GOORH20-85-N | GOORH20-85-B | 50 | | | | 85 | | | | | | 12.5 | 2*30 | | |
| GOORH30-35 | GOORH30-35-N | GOORH30-35-B | 18 | Ø2.0 | 30±0.1 | 12±0.1 | 35 | 11.5 | 6 | 12.0 | 22 | M3*5.5L | 3.5 | 1*28 | 3.5 | 6 |
| GOORH30-50 | GOORH30-50-N | GOORH30-50-B | 30 | | | | 50 | | | | | | | 1*43 | | |
| GOORH30-65 | GOORH30-65-N | GOORH30-65-B | 40 | | | | 65 | | | | | | 17.5 | 1*30 | | |
| GOORH30-80 | GOORH30-80-N | GOORH30-80-B | 50 | | | | 80 | | | | | | | 1*45 | | |
| GOORH30-95 | GOORH30-95-N | GOORH30-95-B | 60 | | | | 95 | | | | | | | 2*30 | | |
| GOORH30-110 | GOORH30-110-N | GOORH30-110-B | 70 | | | | 110 | | | | | | 32.5 | 1*45 | | |
| GOORH30-125 | GOORH30-125-N | GOORH30-125-B | 80 | | | | 125 | | | | | | 17.5 | 2*45 | | |
| GOORH40-55 | GOORH40-55-N | GOORH40-55-B | 30 | Ø3.0 | 40±0.1 | 16±0.1 | 55 | 15.5 | 8 | 16 | 30 | M4*7.5L | 7.5 | 1*40 | 4.5 | 7.1 |
| GOORH40-80 | GOORH40-80-N | GOORH40-80-B | 45 | | | | 80 | | | | | | | 1*65 | | |
| GOORH40-105 | GOORH40-105-N | GOORH40-105-B | 60 | | | | 105 | | | | | | 27.5 | 1*50 | | |
| GOORH40-130 | GOORH40-130-N | GOORH40-130-B | 75 | | | | 130 | | | | | | | 1*75 | | |
| GOORH40-155 | GOORH40-155-N | GOORH40-155-B | 90 | | | | 155 | | | | | | | 2*50 | | |
| GOORH40-180 | GOORH40-180-N | GOORH40-180-B | 105 | | | | 180 | | | | | | 52.5 | 1*75 | | |
| GOORH40-205 | GOORH40-205-N | GOORH40-205-B | 130 | | | | 205 | | | | | | 27.5 | 2*75 | | |

| Ordering Example : | GOORH | - | 30 | - | 25 | - | N |
|---|---|---|---|---|---|---|---|
| | H type table | | Table width | | Table length | | Antirust |

## GOORH / GOORH - N / GOORH - B

GOORH

GOORH-N

GOORH-B

## Material Specification

| Component / Material / Model No. | Table | Rail | Retainer | Roller |
|---|---|---|---|---|
| GOORH | Aluminum alloy +black anodized | SUJ2 | SUS304 | SUJ2 |
| GOORH - N | S50C+Ni | SUJ2+Ni | SUS304 | SUJ2 |
| GOORH - B | S50C +phosphate | SUJ2 | SUS304 | SUJ2 |

GOORH-N No Surface finished to V-groove surface of the rail.

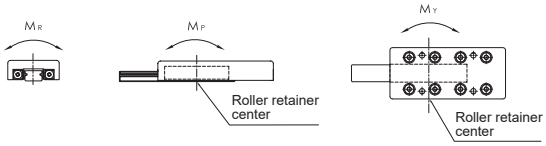


★ Each of load and torque changes oppositely in stroke variation

| Base Mounting Dimensions (mm) | | | | Basic Dynamic Load Rating C(N) | Basic Static Load Rating Co(N) | Allow-Able Load Fu(N) | Static Rated Moment | | | Weight (kg) | | Table Moving Accuracy (μm) | |
|---|---|---|---|---|---|---|---|---|---|---|---|---|---|
| $h_1$ | $L_1$ | $L_2$ | $L_3$ | | | | $M_R$ (N·m) | $M_P$ (N·m) | $M_Y$ (N·m) | Standard | Antirust | Center Parallelism | Side Parallelism |
| 2.2 | 3.5 | 18 | / | 379 | 576 | 192 | 1.4 | 1.2 | 1.4 | 0.01 | 0.02 | 2 | 4 |
| | 5 | 25 | | 523 | 865 | 288 | 2.2 | 2.6 | 3.0 | 0.02 | 0.03 | | |
| | 3.5 | 38 | 25 | 657 | 1,153 | 384 | 2.9 | 4.6 | 5.2 | 0.03 | 0.04 | | 5 |
| | | 48 | 29 | 783 | 1,441 | 480 | 3.6 | 7.2 | 7.9 | 0.03 | 0.05 | | |
| | 5 | 55 | 31 | 903 | 1,729 | 576 | 4.3 | 10.4 | 11.2 | 0.04 | 0.06 | | |
| | | 65 | 35 | 1,131 | 2,306 | 769 | 5.8 | 18.4 | 17.3 | 0.05 | 0.08 | | |
| | | 75 | 40 | 1,240 | 2,594 | 865 | 6.5 | 23.3 | 22.0 | 0.05 | 0.09 | | |
| 3.3 | 5 | 25 | / | 895 | 1,170 | 390 | 5.1 | 3.1 | 3.9 | 0.05 | 0.05 | 2 | 4 |
| | 7.5 | 35 | | 1,552 | 2,339 | 780 | 10.1 | 12.5 | 10.9 | 0.07 | 0.12 | | |
| | 5 | 55 | 33 | 1,849 | 2,924 | 975 | 12.7 | 19.5 | 17.5 | 0.09 | 0.15 | | 5 |
| | | 70 | 40 | 2,164 | 3,509 | 1,170 | 15.2 | 28.1 | 30.4 | 0.11 | 0.19 | | |
| | | 85 | 45 | 2,407 | 4,093 | 1,364 | 17.7 | 38.2 | 40.9 | 0.14 | 0.23 | | |
| | 7.5 | 95 | 50 | 2,930 | 5,263 | 1,754 | 22.8 | 63.2 | 59.6 | 0.16 | 0.26 | | |
| | | 110 | 55 | 3,181 | 5,848 | 1,949 | 25.3 | 78.0 | 74.1 | 0.18 | 0.30 | | |
| 4.3 | 7.5 | 40 | / | 2,901 | 4,567 | 1,522 | 26.5 | 22.8 | 26.6 | 0.15 | 0.24 | 2 | 5 |
| | 6 | 65 | 43 | 4,338 | 7,611 | 2,537 | 44.1 | 63.4 | 57.1 | 0.21 | 0.35 | | |
| | 7.5 | 90 | 55 | 5,646 | 10,655 | 3,552 | 61.8 | 124.3 | 115.4 | 0.28 | 0.46 | 3 | |
| | | 115 | 65 | 6,268 | 12,178 | 4,059 | 70.6 | 162.4 | 172.5 | 0.35 | 0.57 | | |
| | | 140 | 95 | 7,462 | 15,222 | 5,074 | 88.3 | 253.7 | 266.4 | 0.42 | 0.68 | | |
| | | 165 | 85 | 8,603 | 18,266 | 6,089 | 105.9 | 365.3 | 350.1 | 0.49 | 0.80 | | |
| | | 190 | 90 | 9,157 | 19,789 | 6,596 | 114.8 | 428.8 | 445.2 | 0.56 | 0.91 | | |

## GOORS / GOORS - N / GOORS - B

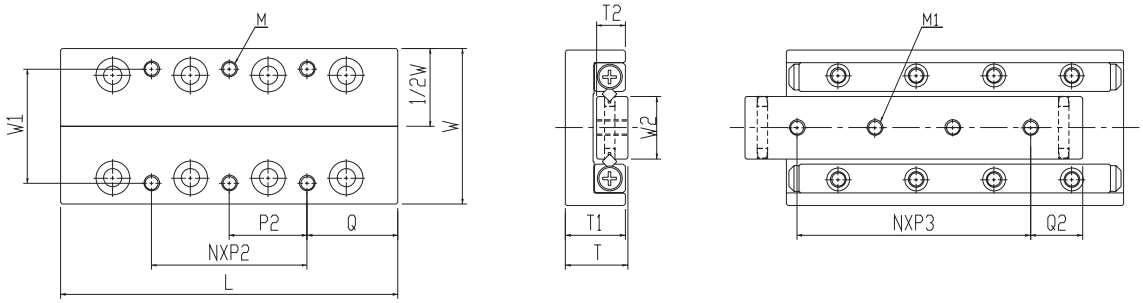


## Specification

| Model No. | | | Max. Stroke (mm) | Roller Dia. (mm) | Main Dimensions (mm) | | | | | | Table Mounting Dimensions (mm) | | | |
|---|---|---|---|---|---|---|---|---|---|---|---|---|---|---|
| Standard | Antirust | Black Coating | | | W | T | L | $T_1$ | $T_2$ | $W_2$ | $W_1$ | M | Q | N*$P_2$ |
| GOORS20-25 | GOORS20-25-N | GOORS20-25-B | 12 | Ø1.5 | 20±0.1 | 8±0.1 | 25 | 7.5 | 4 | 6.6 | 14 | M2.5*3.5L | 3.5 | 1*18 |
| GOORS20-35 | GOORS20-35-N | GOORS20-35-B | 18 | | | | 35 | | | | | | | 2*28 |
| GOORS20-45 | GOORS20-45-N | GOORS20-45-B | 25 | | | | 45 | | | | | | 12.5 | 1*20 |
| GOORS20-55 | GOORS20-55-N | GOORS20-55-B | 32 | | | | 55 | | | | | | | 1*30 |
| GOORS20-65 | GOORS20-65-N | GOORS20-65-B | 40 | | | | 65 | | | | | | | 2*20 |
| GOORS20-75 | GOORS20-75-N | GOORS20-75-B | 45 | | | | 75 | | | | | | 22.5 | 1*30 |
| GOORS20-85 | GOORS20-85-N | GOORS20-85-B | 50 | | | | 85 | | | | | | 12.5 | 2*30 |
| GOORS30-35 | GOORS30-35-N | GOORS30-35-B | 18 | Ø2.0 | 30±0.1 | 12±0.1 | 35 | 11.5 | 6 | 12 | 22 | M3*5.5L | 3.5 | 1*28 |
| GOORS30-50 | GOORS30-50-N | GOORS30-50-B | 30 | | | | 50 | | | | | | | 1*43 |
| GOORS30-65 | GOORS30-65-N | GOORS30-65-B | 40 | | | | 65 | | | | | | 17.5 | 1*30 |
| GOORS30-80 | GOORS30-80-N | GOORS30-80-B | 50 | | | | 80 | | | | | | | 1*45 |
| GOORS30-95 | GOORS30-95-N | GOORS30-95-B | 60 | | | | 95 | | | | | | | 2*30 |
| GOORS30-110 | GOORS30-110-N | GOORS30-110-B | 70 | | | | 110 | | | | | | 32.5 | 1*45 |
| GOORS30-125 | GOORS30-125-N | GOORS30-125-B | 80 | | | | 125 | | | | | | 17.5 | 2*45 |
| GOORS40-55 | GOORS40-55-N | GOORS40-55-B | 30 | Ø3.0 | 40±0.1 | 16±0.1 | 55 | 15.5 | 8 | 16 | 30 | M4*7.5L | 7.5 | 1*40 |
| GOORS40-80 | GOORS40-80-N | GOORS40-80-B | 45 | | | | 80 | | | | | | | 1*65 |
| GOORS40-105 | GOORS40-105-N | GOORS40-105-B | 60 | | | | 105 | | | | | | 27.5 | 1*50 |
| GOORS40-130 | GOORS40-130-N | GOORS40-130-B | 75 | | | | 130 | | | | | | | 1*75 |
| GOORS40-155 | GOORS40-155-N | GOORS40-155-B | 90 | | | | 155 | | | | | | | 2*50 |
| GOORS40-180 | GOORS40-180-N | GOORS40-180-B | 105 | | | | 180 | | | | | | 52.5 | 1*75 |
| GOORS40-205 | GOORS40-205-N | GOORS40-205-B | 130 | | | | 205 | | | | | | 27.5 | 2*75 |

| Ordering Example : | GOORS | - | 30 | - | 25 | - | N |
|---|---|---|---|---|---|---|---|
| | S type table | | Table width | | Table length | | Antirust |

## GOORS / GOORS - N / GOORS - B

GOORS

GOORS-N

GOORS-B

## Material Specification

| Component / Material / Model No. | Table | Rail | Retainer | Roller |
|---|---|---|---|---|
| GOORS | Aluminum alloy +black anodized | SUJ2 | SUS304 | SUJ2 |
| GOORS - N | S50C+Ni | SUJ2+Ni | SUS304 | SUJ2 |
| GOORS - B | S50C +phosphate | SUJ2 | SUS304 | SUJ2 |

GOORS-N No Surface finished to V-groove surface of the rail.

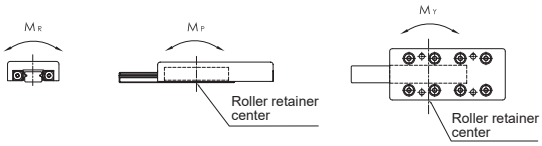


★ Each of load and torque changes oppositely in stroke variation

| Base Mounting Dimensions (mm) | | | Basic Dynamic Load Rating C(N) | Basic Static Load Rating Co(N) | Allow-Able Load Fu(N) | Static Rated Moment | | | Weight (kg) | | Table Moving Accuracy (μm) | |
|---|---|---|---|---|---|---|---|---|---|---|---|---|
| M1 | $Q_2$ | $N*P_3$ | | | | $M_R$ (N·m) | $M_P$ (N·m) | $M_Y$ (N·m) | Standard | Antirust | Center Parallelism | Side Parallelism |
| M2.6 | 5 | 2*7.5 | 379 | 576 | 192 | 1.4 | 1.2 | 1.4 | 0.01 | 0.02 | 2 | 4 |
| | 7.5 | 2*10 | 523 | 865 | 288 | 2.2 | 2.6 | 3.0 | 0.02 | 0.03 | | |
| | | 3*10 | 657 | 1,153 | 384 | 2.9 | 4.6 | 5.2 | 0.03 | 0.05 | | 5 |
| | | 4*10 | 783 | 1,441 | 480 | 3.6 | 7.2 | 7.9 | 0.03 | 0.06 | | |
| | | 5*10 | 903 | 1,729 | 576 | 4.3 | 10.4 | 11.2 | 0.04 | 0.07 | | |
| | | 6*10 | 1,131 | 2,306 | 769 | 5.8 | 18.4 | 17.3 | 0.05 | 0.08 | | |
| | | 7*10 | 1,240 | 2,594 | 865 | 6.5 | 23.3 | 22.0 | 0.05 | 0.09 | | |
| M3 | 7.5 | 1*20 | 895 | 1,170 | 390 | 5.1 | 3.1 | 3.9 | 0.05 | 0.05 | 2 | 4 |
| | 10 | 2*15 | 1,552 | 2,339 | 780 | 10.1 | 12.5 | 10.9 | 0.07 | 0.12 | | |
| | | 3*15 | 1,849 | 2,924 | 975 | 12.7 | 19.5 | 17.5 | 0.10 | 0.16 | | 5 |
| | | 4*15 | 2,134 | 3,509 | 1,170 | 15.2 | 28.1 | 30.4 | 0.12 | 0.19 | | |
| | | 5*15 | 2,407 | 4,093 | 1,364 | 17.7 | 38.2 | 40.9 | 0.14 | 0.23 | | |
| | | 6*15 | 2,930 | 5,263 | 1,754 | 22.8 | 63.2 | 59.6 | 0.16 | 0.27 | | |
| | | 7*15 | 3,181 | 5,848 | 1,949 | 25.3 | 78.0 | 74.1 | 0.18 | 0.30 | | |
| M4 | 10 | 1*35 | 2,901 | 4,567 | 1,522 | 26.5 | 22.8 | 26.6 | 0.15 | 0.24 | 2 | 5 |
| | 15 | 2*25 | 4,338 | 7,611 | 2,537 | 44.1 | 63.4 | 57.1 | 0.22 | 0.35 | | |
| | | 3*25 | 5,646 | 10,655 | 3,552 | 61.8 | 124.3 | 115.4 | 0.29 | 0.46 | 3 | |
| | | 4*25 | 6,268 | 12,178 | 4,059 | 70.6 | 162.4 | 172.5 | 0.36 | 0.58 | | |
| | | 5*25 | 7,462 | 15,222 | 5,074 | 88.3 | 259.7 | 266.4 | 0.42 | 0.69 | | |
| | | 6*25 | 8,603 | 18,266 | 6,089 | 105.9 | 365.3 | 350.1 | 0.49 | 0.80 | | |
| | | 7*25 | 9,157 | 19,789 | 6,596 | 114.8 | 428.8 | 445.2 | 0.56 | 0.91 | | |

## GOORA - S

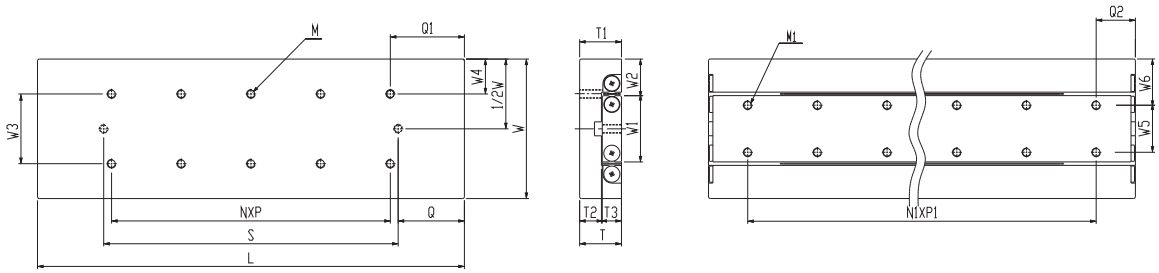


## Specification

| Model No. | Max. Stroke (mm) | Roller Dia. (mm) | Main Dimensions (mm) | | | Mounting Dimensions (mm) | | | | | | | | | |
|---|---|---|---|---|---|---|---|---|---|---|---|---|---|---|---|
| Corrosion Resistiance | | | W | T | L | $W_3$ | $W_4$ | Q | S | N*P | M | Q1 | $T_1$ | $T_2$ | $T_3$ |
| GOORA30-25-S | 12 | | | | 25 | | | | 2.5 | / | | 20 | | | |
| GOORA30-35-S | 18 | | | | 35 | | | | 4.5 | 1*10 | | 26 | | | |
| GOORA30-45-S | 25 | | | | 45 | | | | 6 | 2*10 | | 33 | | | |
| GOORA30-55-S | 32 | Ø1.5 | 30±0.1 | 8±0.1 | 55 | 10 | 10 | 12.5 | 7.5 | 3*10 | M2 | 40 | 11 | 7 | 4 |
| GOORA30-65-S | 40 | | | | 65 | | | | 8.5 | 4*10 | | 48 | | | |
| GOORA30-75-S | 45 | | | | 75 | | | | 11 | 5*10 | | 53 | | | |
| GOORA30-85-S | 50 | | | | 85 | | | | 13.5 | 6*10 | | 58 | | | |
| GOORA40-35-S | 18 | Ø2.0 | | 14±0.1 | 35 | | | | 3 | / | | 29 | 14 | 8 | 6 |
| GOORA40-50-S | 30 | | | | 50 | | | | 4.5 | 1*15 | | 41 | | | |
| GOORA40-65-S | 40 | | | | 65 | | | | 7 | 2*15 | | 51 | | | |
| GOORA40-80-S | 50 | Ø3.0 | 40±0.1 | 15±0.1 | 80 | 15 | 12.5 | 17.5 | 9.5 | 3*15 | M3 | 61 | 15 | 7 | 8 |
| GOORA40-95-S | 60 | | | | 95 | | | | 12 | 4*15 | | 71 | | | |
| GOORA40-110-S | 70 | | | | 110 | | | | 14.5 | 5*15 | | 81 | | | |
| GOORA40-125-S | 80 | | | | 125 | | | | 17 | 6*15 | | 91 | | | |
| GOORA60-55-S | 30 | | | | 55 | | | | 5.5 | / | | 44 | | | |
| GOORA60-80-S | 45 | | | | 80 | | | | 10.8 | 1*25 | | 59 | | | |
| GOORA60-105-S | 60 | | | | 105 | | | | 15.5 | 2*25 | | 74 | | | |
| GOORA60-130-S | 75 | Ø3.0 | 60±0.1 | 18.5±0.1 | 130 | 25 | 17.5 | 27.5 | 20.8 | 3*25 | M4 | 89 | 18.5 | 10.5 | 8 |
| GOORA60-155-S | 90 | | | | 155 | | | | 25.5 | 4*25 | | 104 | | | |
| GOORA60-180-S | 105 | | | | 180 | | | | 30.5 | 5*25 | | 119 | | | |
| GOORA60-205-S | 130 | | | | 205 | | | | 30.5 | 6*25 | | 144 | | | |

| Ordering Example : | GOORA | - | 30 | - | 25 | - | S |
|---|---|---|---|---|---|---|---|
| | A type table | | Table width | | Table length | | Corrosion Resistance |

## GOORA - S

## Material Specification

| Component / Material / Model No. | Table | Rail | Retainer | Roller |
|---|---|---|---|---|
| GOORA - S | SUS440C+Ni | | SUS304 | SUS440C |

Table and rail are in one unit in this series.
GRA-S No Surface finished to V-groove surface of the rail.

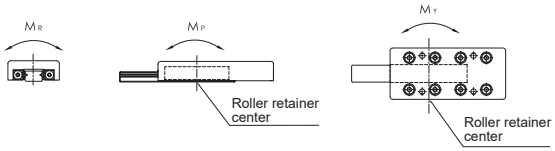


★ Each of load and torque changes oppositely in stroke variation

| $W_1$ | $W_2$ | $W_5$ | $W_6$ | $N_1$*$P_1$ | $Q_2$ | $M_1$ | Basic Dynamic Load Rating C(N) | Basic Static Load Rating Co(N) | Allow-Able Load Fu(N) | Static Rated Moment $M_R$ (N•m) | Static Rated Moment $M_P$ (N•m) | Static Rated Moment $M_Y$ (N•m) | Weight (kg) | Table Moving Accuracy (μm) Center Parallelism | Table Moving Accuracy (μm) Side Parallelism |
|---|---|---|---|---|---|---|---|---|---|---|---|---|---|---|---|
| 12.8 | 8.6 | / | 15 | 1*10 | 7.5 | M2 | 379 | 576 | 192 | 2.6 | 1.2 | 1.4 | 0.09 | 2 | 4 |
| | | | | 2*10 | | | 523 | 865 | 288 | 3.9 | 2.6 | 3.0 | 0.12 | | |
| | | | | 3*10 | | | 657 | 1,153 | 384 | 5.2 | 4.6 | 5.2 | 0.16 | | |
| | | | | 4*10 | | | 783 | 1,441 | 480 | 6.5 | 7.2 | 7.9 | 0.19 | | 5 |
| | | | | 5*10 | | | 903 | 1,729 | 576 | 7.8 | 10.4 | 11.2 | 0.23 | | |
| | | | | 6*10 | | | 1,131 | 2,306 | 769 | 10.4 | 18.4 | 17.3 | 0.26 | | |
| | | | | 7*10 | | | 1,240 | 2,594 | 865 | 11.7 | 23.3 | 22.0 | 0.30 | | |
| 17 | 11.5 | / | 20 | 1*15 | 10 | M3 | 895 | 1,170 | 390 | 7.0 | 3.1 | 3.9 | 0.20 | 2 | 4 |
| 13.1 | 13.5 | | | 2*15 | | | 2,901 | 4,567 | 1,522 | 42.6 | 22.8 | 26.6 | 0.29 | | |
| | | | | 2*15 | 17.5 | | 2,901 | 4,567 | 1,522 | 42.6 | 22.8 | 19.0 | 0.36 | | 5 |
| | | | | 4*15 | 10 | | 4,338 | 7,611 | 2,591 | 71.0 | 63.4 | 57.1 | 0.46 | | |
| | | | | 4*15 | 17.5 | | 3,640 | 6,089 | 2,030 | 56.8 | 40.6 | 45.7 | 0.52 | | |
| | | | | 5*15 | | | 5,005 | 9,133 | 3,044 | 85.2 | 91.3 | 98.9 | 0.63 | 3 | 6 |
| | | | | 5*15 | 25 | | 5,005 | 9,133 | 3,044 | 85.2 | 91.3 | 83.7 | 0.69 | | |
| 26.6 | 16.7 | 17 | 21.5 | 1*25 | 15 | M4 | 2,901 | 4,567 | 1,522 | 42.6 | 22.8 | 26.6 | 0.65 | 2 | 5 |
| | | | | 2*25 | | | 4,338 | 7,611 | 2,537 | 71.0 | 63.4 | 57.1 | 0.95 | | |
| | | | | 3*25 | | | 5,646 | 10,655 | 3,552 | 99.5 | 124.3 | 115.4 | 1.25 | 3 | 6 |
| | | | | 4*25 | | | 6,268 | 12,178 | 4,059 | 113.7 | 162.4 | 172.5 | 1.55 | | |
| | | | | 5*25 | | | 7,462 | 15,222 | 5,074 | 142.1 | 253.7 | 266.4 | 1.85 | | |
| | | | | 6*25 | | | 8,603 | 18,266 | 6,089 | 170.5 | 365.3 | 350.1 | 2.15 | | 7 |
| | | | | 7*25 | | | 9,157 | 19,789 | 6,596 | 184.7 | 428.8 | 445.2 | 2.45 | | |

## GOORA - S

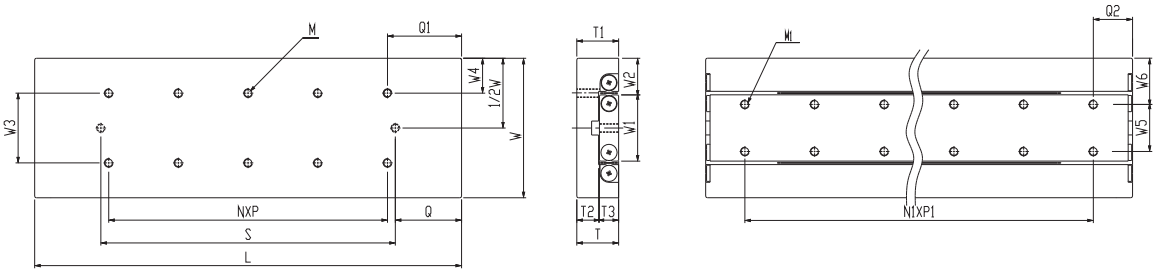


## Specification

| Model No. | Max. Stroke (mm) | Roller Dia. (mm) | Main Dimensions (mm) | | | Mounting Dimensions (mm) | | | | | | | | | |
|---|---|---|---|---|---|---|---|---|---|---|---|---|---|---|---|
| Corrosion Resistiance | | | W | T | L | $W_3$ | $W_4$ | Q | S | N*P | M | Q1 | $T_1$ | $T_2$ | $T_3$ |
| GOORA80-85-S | 50 | Ø4.0 | 80±0.1 | 24±0.1 | 85 | 40 | 20 | 42.5 | 10.5 | / | M5 | 64 | 24 | 13 | 11 |
| GOORA80-125-S | 75 | | | | 125 | | | | 18 | 1*40 | | 89 | | | |
| GOORA80-165-S | 105 | | | | 165 | | | | 23 | 2*40 | | 119 | | | |
| GOORA80-205-S | 135 | | | | 205 | | | | 28 | 3*40 | | 149 | | | |
| GOORA80-245-S | 155 | | | | 245 | | | | 38 | 4*40 | | 169 | | | |
| GOORA80-285-S | 185 | | | | 285 | | | | 43 | 5*40 | | 199 | | | |
| GOORA80-325-S | 215 | | | | 325 | | | | 48 | 6*40 | | 229 | | | |
| GOORA100-110-S | 60 | Ø6.0 | 100±0.1 | 31±0.1 | 110 | 50 | 25 | 55 | 16.5 | / | M6 | 77 | 31 | 16 | 15 |
| GOORA100-160-S | 95 | | | | 160 | | | | 23.5 | 1*50 | | 113 | | | |
| GOORA100-210-S | 130 | | | | 210 | | | | 31 | 2*50 | | 148 | | | |
| GOORA100-260-S | 165 | | | | 260 | | | | 38.5 | 3*50 | | 183 | | | |
| GOORA100-310-S | 200 | | | | 310 | | | | 46 | 4*50 | | 218 | | | |
| GOORA100-360-S | 235 | | | | 360 | | | | 53.5 | 5*50 | | 253 | | | |
| GOORA100-410-S | 265 | | | | 410 | | | | 63.5 | 6*50 | | 283 | | | |
| GOORA100-510-S | 340 | | | | 510 | | | | 81 | 7*50 | | 348 | | | |
| GOORA145-210-S | 130 | Ø9.0 | 145±0.1 | 42.5±0.1 | 210 | 85 | 30 | 105 | 27 | / | M8 | 156 | 43 | 21 | 21 |
| GOORA145-310-S | 180 | | | | 310 | | | | 52 | 1*100 | | 206 | | | |
| GOORA145-410-S | 350 | | | | 410 | | | | 12 | 2*100 | | 376 | | | |
| GOORA145-510-S | 450 | | | | 510 | | | | 17 | 3*100 | | 476 | | | |
| GOORA145-610-S | 550 | | | | 610 | | | | | 4*100 | | 576 | | | |

| Ordering Example : | GOORA | - | 80 | - | 85 | - | S |
|---|---|---|---|---|---|---|---|
| | A type table | | Table width | | Table length | | Corrosion Resistance |

## GOORA - S

## Material Specification

| Component / Material / Model No. | Table | Rail | Retainer | Roller |
|---|---|---|---|---|
| GOORA - S | SUS440C+Ni | | SUS304 | SUS440C |

Table and rail are in one unit in this series.
GRA-S No Surface finished to V-groove surface of the rail.

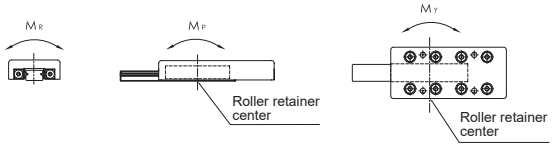


★ Each of load and torque changes oppositely in stroke variation

| $W_1$ | $W_2$ | $W_5$ | $W_6$ | $N_1$*$P_1$ | $Q_2$ | $M_1$ | Basic Dynamic Load Rating C(N) | Basic Static Load Rating Co(N) | Allow-Able Load Fu(N) | Static Rated Moment $M_R$ (N·m) | Static Rated Moment $M_P$ (N·m) | Static Rated Moment $M_Y$ (N·m) | Weight (kg) | Table Moving Accuracy (μm) Center Parallelism | Table Moving Accuracy (μm) Side Parallelism |
|---|---|---|---|---|---|---|---|---|---|---|---|---|---|---|---|
| 38 | 21 | 27 | 26.5 | 1*40 | 22.5 | M5 | 6,617 | 9,357 | 3,119 | 124.8 | 87.3 | 76.4 | 1.14 | 2 | 5 |
| | | | | 2*40 | | | 9,097 | 14,035 | 4,678 | 187.1 | 196.5 | 180.1 | 1.68 | 3 | 6 |
| | | | | 3*40 | | | 10,264 | 16,375 | 5,458 | 218.3 | 267.5 | 286.6 | 2.22 | | 7 |
| | | | | 4*40 | | | 12,492 | 21,053 | 7,018 | 280.7 | 442.1 | 466.7 | 2.76 | | |
| | | | | 5*40 | | | 14,612 | 25,732 | 8,577 | 343.1 | 660.4 | 690.5 | 3.30 | | |
| | | | | 6*40 | | | 16,646 | 30,410 | 10,137 | 405.5 | 922.4 | 957.9 | 3.84 | | |
| | | | | 7*40 | | | 18,612 | 35,089 | 11,696 | 467.8 | 1228.1 | 1187.2 | 4.38 | 4 | 8 |
| 42 | 29 | 26 | 37 | 1*50 | 30 | M6 | 13,923 | 21,053 | 7,018 | 315.8 | 252.6 | 221.1 | 2.33 | 3 | 6 |
| | | | | 2*50 | | | 16,592 | 26,316 | 8,772 | 394.7 | 394.7 | 434.2 | 3.42 | | |
| | | | | 3*50 | | | 21,596 | 36,842 | 12,281 | 552.6 | 773.7 | 828.9 | 4.51 | | 7 |
| | | | | 4*50 | | | 26,285 | 47,369 | 15,790 | 710.5 | 1279.0 | 1207.9 | 5.57 | | |
| | | | | 5*50 | | | 30,744 | 57,895 | 19,298 | 868.4 | 1910.5 | 1823.7 | 6.66 | | |
| | | | | 6*50 | | | 35,024 | 68,421 | 22,807 | 1026.3 | 2668.4 | 2565.8 | 7.75 | 4 | 8 |
| | | | | 7*50 | | | 39,160 | 78,948 | 26,316 | 1184.2 | 3552.6 | 3434.2 | 8.84 | | |
| | | | | 8*50 | | | 47,576 | 100,001 | 33,334 | 1500.0 | 5194.7 | 5044.7 | 11.02 | | |
| 68.4 | 38.3 | 46 | 49.5 | 1*100 | 55 | M8 | 46,991 | 72,741 | 24,247 | 1745.8 | 1697.3 | 1527.6 | 9.08 | 3 | 7 |
| | | | | 2*100 | | | 61,165 | 101,838 | 33,946 | 2444.1 | 3326.7 | 3564.3 | 13.46 | | |
| | | | | 3*100 | | | 67,898 | 116,386 | 38,795 | 2793.3 | 4345.1 | 4073.5 | 17.74 | 4 | 8 |
| | | | | 4*100 | | | 80,829 | 145,482 | 48,494 | 3491.6 | 6789.2 | 6449.7 | 22.11 | | |
| | | | | 5*100 | | | 87,073 | 160,031 | 53,344 | 3840.7 | 8214.9 | 8588.3 | 26.47 | | |

## GOORB - S

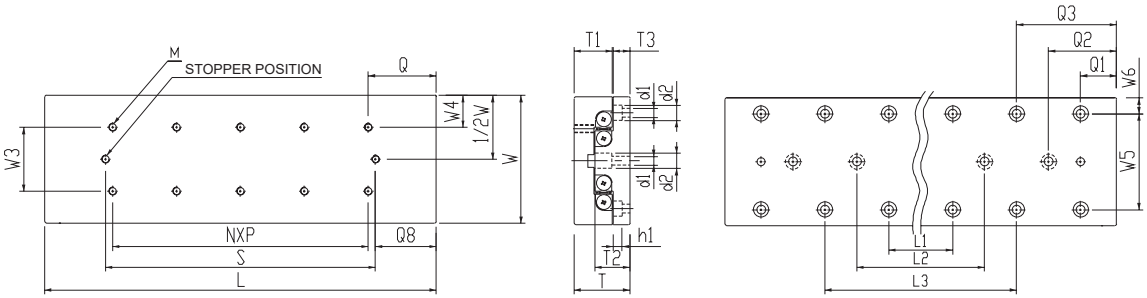


## Specification

| Model No. | Max. Stroke (mm) | Roller Dia. (mm) | Main Dimensions (mm) | | | Mounting Dimensions (mm) | | | | | | | | | | | | |
|---|---|---|---|---|---|---|---|---|---|---|---|---|---|---|---|---|---|---|
| Corrosion Resistiance | | | W | T | L | $T_1$ | $T_2$ | $T_3$ | N*P | M | S | Q | $Q_8$ | $W_3$ | $W_4$ | $L_1$ | $L_2$ | $L_3$ |
| GOORB30-25-S | 12 | | | | 25 | | | | / | | 20 | | 2.5 | | | 18 | | |
| GOORB30-35-S | 18 | | | | 35 | | | | 1*10 | | 26 | | 4.5 | | | 28 | | / |
| GOORB30-45-S | 25 | | | | 45 | | | | 2*10 | | 33 | | 6 | | | 38 | | |
| GOORB30-55-S | 32 | Ø1.5 | 30±0.1 | 17±0.1 | 55 | 11 | 10 | 5.5 | 3*10 | M2 | 40 | 12.5 | 7.5 | 10 | 10 | 48 | / | 28 |
| GOORB30-65-S | 40 | | | | 65 | | | | 4*10 | | 48 | | 8.5 | | | 58 | | 38 |
| GOORB30-75-S | 45 | | | | 75 | | | | 5*10 | | 53 | | 11 | | | 68 | | 45 |
| GOORB30-85-S | 50 | | | | 85 | | | | 6*10 | | 58 | | 13.5 | | | 78 | | 58 |
| GOORB40-35-S | 18 | Ø2.0 | | | 35 | 8 | 13 | 6.5 | / | | 29 | | 3 | | | 25 | | |
| GOORB40-50-S | 30 | | | | 50 | | | | 1*15 | | 41 | | 4.5 | | | 40 | | / |
| GOORB40-65-S | 40 | | | | 65 | | | | 2*15 | | 51 | | 7 | | | 55 | | |
| GOORB40-80-S | 50 | Ø3.0 | 40±0.1 | 21±0.1 | 80 | 14 | 14 | 5.5 | 3*15 | M3 | 61 | 17.5 | 9.5 | 15 | 12.5 | 70 | / | 40 |
| GOORB40-95-S | 60 | | | | 95 | | | | 4*15 | | 71 | | 12 | | | 85 | | 55 |
| GOORB40-110-S | 70 | | | | 110 | | | | 5*15 | | 81 | | 14.5 | | | 100 | | 70 |
| GOORB40-125-S | 80 | | | | 125 | | | | 6*15 | | 91 | | 17 | | | 115 | | 85 |
| GOORB60-55-S | 30 | | | | 55 | | | | / | | 44 | | 5.5 | | | 35 | | |
| GOORB60-80-S | 45 | | | | 80 | | | | 1*25 | | 59 | | 10.8 | | | 60 | / | |
| GOORB60-105-S | 60 | | | | 105 | | | | 2*25 | | 74 | | 15.5 | | | 85 | | / |
| GOORB60130-S | 75 | Ø3.0 | 60±0.1 | 28±0.1 | 130 | 18.5 | 17.5 | 9 | 3*25 | M4 | 89 | 27.5 | 20.8 | 25 | 17.5 | 110 | | |
| GOORB60-155-S | 90 | | | | 155 | | | | 4*25 | | 104 | | 25.5 | | | 135 | 85 | |
| GOORB60-180-S | 105 | | | | 180 | | | | 5*25 | | 119 | | 30.5 | | | 160 | 110 | |
| GOORB60-205-S | 130 | | | | 205 | | | | 6*25 | | 144 | | 30.5 | | | 185 | 135 | 85 |

| Ordering Example : | GOORB | - | 30 | - | 25 | - | S |
|---|---|---|---|---|---|---|---|
| | B type table | | Table width | | Table length | | Corrosion Resistance |

## GOORB - S

## Material Specification

| Component / Material / Model No. | Table | Rail | Retainer | Roller |
|---|---|---|---|---|
| GOORB - S | SUS440C+Ni | | SUS304 | SUS440C |

Table and rail are in one unit in this series.
GRB-S No Surface finished to V-groove surface of the rail.

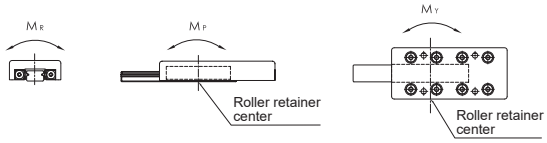


★ Each of load and torque changes oppositely in stroke variation

| Q1 | Q2 | Q3 | W5 | W6 | d1 | d2 | h1 | Basic Dynamic Load Rating C(N) | Basic Static Load Rating Co(N) | Allow-Able Load Fu(N) | Static Rated Moment $M_R$ (N·m) | Static Rated Moment $M_P$ (N·m) | Static Rated Moment $M_Y$ (N·m) | Weight (kg) | Table Moving Accuracy (μm) Center Parallelism | Table Moving Accuracy (μm) Side Parallelism |
|---|---|---|---|---|---|---|---|---|---|---|---|---|---|---|---|---|
| 3.5 | / | / | 22 | 4 | 2.55 | 4.1 | 2.5 | 379 | 576 | 192 | 2.6 | 1.2 | 1.4 | 0.09 | 2 | 4 |
| | | | | | | | | 523 | 865 | 288 | 3.9 | 2.6 | 3.0 | 0.12 | | |
| | | | | | | | | 657 | 1,153 | 384 | 5.2 | 4.6 | 5.2 | 0.16 | | |
| | | 13.5 | | | | | | 783 | 1,441 | 480 | 6.5 | 7.2 | 7.9 | 0.19 | | 5 |
| | | | | | | | | 903 | 1,729 | 576 | 7.8 | 10.4 | 11.2 | 0.23 | | |
| | | | | | | | | 1,131 | 2,306 | 769 | 10.4 | 18.4 | 17.3 | 0.26 | | |
| | | | | | | | | 1,240 | 2,594 | 865 | 11.7 | 23.3 | 22.0 | 0.30 | | |
| 5 | / | / | 30 | 5 | 3.5 | 6 | 3.5 | 895 | 1,170 | 390 | 7.0 | 3.1 | 3.9 | 0.20 | 2 | 4 |
| | | | | | | | 3.2 | 2,901 | 4,567 | 1,522 | 42.6 | 22.8 | 26.6 | 0.29 | | |
| | | | | | | | | 2,901 | 4,567 | 1,522 | 42.6 | 22.8 | 19.0 | 0.36 | | 5 |
| | | 20 | | | | | | 4,338 | 7,611 | 2,591 | 71.0 | 63.4 | 57.1 | 0.46 | | |
| | | | | | | | | 3,640 | 6,089 | 2,030 | 56.8 | 40.6 | 45.7 | 0.52 | | |
| | | | | | | | | 5,005 | 9,133 | 3,044 | 85.2 | 91.3 | 98.9 | 0.63 | 3 | 6 |
| | | | | | | | | 5,005 | 9,133 | 3,044 | 85.2 | 91.3 | 83.7 | 0.69 | | |
| 10 | / | / | 40 | 10 | 4.5 | 7.5 | 4.5 | 2,901 | 4,567 | 1,522 | 42.6 | 22.8 | 26.6 | 0.65 | 2 | 5 |
| | | | | | | | | 4,338 | 7,611 | 2,537 | 71.0 | 63.4 | 57.1 | 0.95 | | |
| | | | | | | | | 5,646 | 10,655 | 3,552 | 99.5 | 124.3 | 115.4 | 1.25 | 3 | 6 |
| | | | | | | | | 6,268 | 12,178 | 4,059 | 113.7 | 162.4 | 172.5 | 1.55 | | |
| | | | | | | | | 7,462 | 15,222 | 5,074 | 142.1 | 253.7 | 266.4 | 1.85 | | |
| | 35 | | | | | | | 8,603 | 18,266 | 6,089 | 170.5 | 365.3 | 350.1 | 2.15 | | 7 |
| | | 60 | | | | | | 9,157 | 19,789 | 6,596 | 184.7 | 428.8 | 445.2 | 2.45 | | |

## GOORB - S

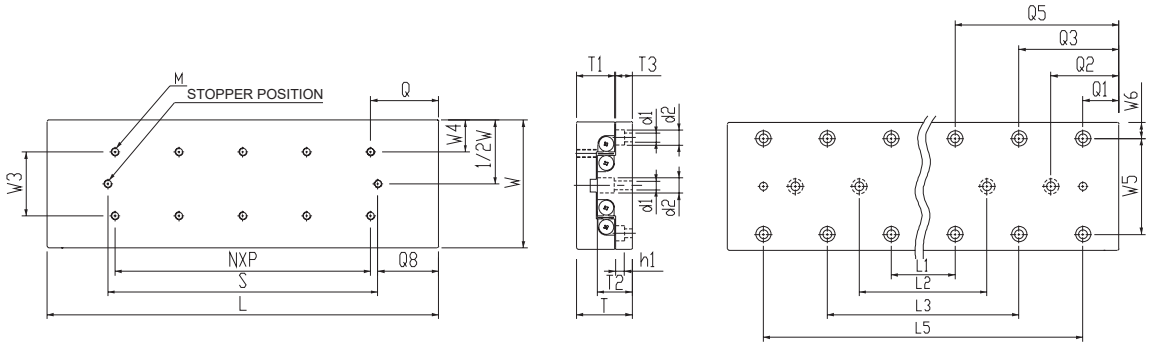


## Specification

| Model No. | Max. Stroke (mm) | Roller Dia. (mm) | Main Dimensions (mm) | | | Mounting Dimensions (mm) | | | | | | | | | | | | |
|---|---|---|---|---|---|---|---|---|---|---|---|---|---|---|---|---|---|---|
| Corrosion Resistiance | | | W | T | L | $T_1$ | $T_2$ | $T_3$ | N*P | M | S | Q | $Q_8$ | $W_3$ | $W_4$ | $L_1$ | $L_2$ | $L_3$ |
| GOORB80-85-S | 50 | | | | 85 | | | | / | | 64 | | 10.5 | | | 40 | | |
| GOORB80-125-S | 75 | | | | 125 | | | | 1*40 | | 89 | | 18 | | | 80 | | / |
| GOORB80-165-S | 105 | | | | 165 | | | | 2*40 | | 119 | | 23 | | | 120 | | |
| GOORB80-205-S | 135 | Ø4.0 | 80±0.1 | 35±0.1 | 205 | 24 | 22 | 10.5 | 3*40 | M5 | 149 | 42.5 | 28 | 40 | 20 | 160 | / | 80 |
| GOORB80-245-S | 155 | | | | 245 | | | | 4*40 | | 169 | | 38 | | | 200 | | 120 |
| GOORB80-285-S | 185 | | | | 285 | | | | 5*40 | | 199 | | 43 | | | 240 | | 160 |
| GOORB80-325-S | 215 | | | | 325 | | | | 6*40 | | 229 | | 48 | | | 280 | | 200 |
| GOORB100-110-S | 60 | | | | 110 | | | | / | | 77 | | 16.5 | | | 90 | | / |
| GOORB100-160-S | 95 | | | | 160 | | | | 1*50 | | 113 | | 23.5 | | | 140 | | |
| GOORB100-210-S | 130 | | | | 210 | | | | 2*50 | | 148 | | 31 | | | 190 | | 90 |
| GOORB100-260-S | 165 | Ø6.0 | 100±0.1 | 45±0.1 | 260 | 31 | 29 | 13 | 3*50 | M6 | 183 | 55 | 38.5 | 50 | 25 | 240 | / | 140 |
| GOORB100-310-S | 200 | | | | 310 | | | | 4*50 | | 218 | | 46 | | | 290 | | 190 |
| GOORB100-360-S | 235 | | | | 360 | | | | 5*50 | | 253 | | 53.5 | | | 340 | | 240 |
| GOORB100-410-S | 265 | | | | 410 | | | | 6*50 | | 283 | | 63.5 | | | 390 | | 290 |
| GOORB100-510-S | 365 | | | | 510 | | | | 8*50 | | 390 | | 60 | | | 490 | | 390 |
| GOORB145-210-S | 130 | | | | 210 | | | | / | | 156 | | 27 | | | 100 | / | |
| GOORB145-310-S | 180 | | | | 310 | | | | 1*100 | | 206 | | 52 | | | 200 | | |
| GOORB145-410-S | 350 | Ø9.0 | 145±0.1 | 60±0.1 | 410 | 43 | 38.5 | 16 | 2*100 | M8 | 376 | 105 | 12 | 85 | 30 | 300 | 100 | / |
| GOORB145-510-S | 450 | | | | 510 | | | | 3*100 | | 476 | | 17 | | | 400 | 200 | |
| GOORB145-610-S | 550 | | | | 610 | | | | 4*100 | | 576 | | | | | 500 | 300 | |

| Ordering Example : | GOORB | - | 80 | - | 85 | - | S |
|---|---|---|---|---|---|---|---|
| | B type table | | Table width | | Table length | | Corrosion Resistance |

## GOORB - S

## Material Specification

| Component / Material / Model No. | Table | Rail | Retainer | Roller |
|---|---|---|---|---|
| GOORB - S | SUS440C+Ni | | SUS304 | SUS440C |

Table and rail are in one unit in this series.
GRB-S No Surface finished to V-groove surface of the rail.

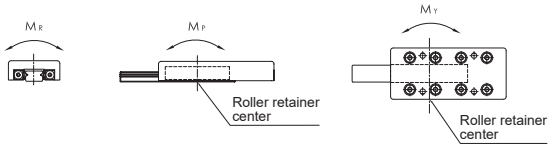


★ Each of load and torque changes oppositely in stroke variation

| $L_5$ | $Q_1$ | $Q_2$ | $Q_3$ | $Q_5$ | $W_5$ | $W_6$ | $d_1$ | $d_2$ | $h_1$ | Basic Dynamic Load Rating C(N) | Basic Static Load Rating Co(N) | Allow-Able Load Fu(N) | Static Rated Moment $M_R$ (N•m) | Static Rated Moment $M_P$ (N•m) | Static Rated Moment $M_Y$ (N•m) | Weight (kg) | Table Moving Accuracy (μm) Center Parallelism | Table Moving Accuracy (μm) Side Parallelism |
|---|---|---|---|---|---|---|---|---|---|---|---|---|---|---|---|---|---|---|
| / | 22.5 | / | / | / | 60 | 10 | 5.5 | 9.5 | 6 | 6,617 | 9,357 | 3,119 | 124.8 | 87.3 | 76.4 | 1.70 | 2 | 5 |
| | | | | | | | | | | 9,097 | 14,035 | 4,678 | 187.1 | 196.5 | 180.1 | 2.52 | 3 | 6 |
| | | | | | | | | | | 10,264 | 16,375 | 5,458 | 218.3 | 267.5 | 286.6 | 3.34 | | 7 |
| | | | 62.5 | | | | | | | 12,492 | 21,053 | 7,018 | 280.7 | 442.1 | 466.7 | 4.14 | | |
| | | | | | | | | | | 14,612 | 25,732 | 8,577 | 343.1 | 660.4 | 690.5 | 4.95 | | |
| | | | | | | | | | | 16,646 | 30,410 | 10,137 | 405.5 | 922.4 | 957.9 | 5.77 | | |
| 120 | | | | 102.5 | | | | | | 18,612 | 35,089 | 11,696 | 467.8 | 1228.1 | 1187.2 | 6.57 | 4 | 8 |
| / | 10 | / | / | / | 60 | 20 | 7 | 11 | 6.5 | 13,923 | 21,053 | 7,018 | 315.8 | 252.6 | 221.1 | 3.48 | 3 | 6 |
| | | | | | | | | | | 16,592 | 26,316 | 8,772 | 394.7 | 394.7 | 434.2 | 5.10 | | |
| | | | 60 | | | | | | | 21,596 | 36,842 | 12,281 | 552.6 | 773.7 | 828.9 | 6.72 | | 7 |
| | | | | | | | | | | 26,285 | 47,369 | 15,790 | 710.5 | 1279.0 | 1207.9 | 8.31 | | |
| | | | | | | | | | | 30,744 | 57,895 | 19,298 | 868.4 | 1910.5 | 1823.7 | 9.95 | | |
| 140 | | | | 110 | | | | | | 35,024 | 68,421 | 22,807 | 1026.3 | 2668.4 | 2565.8 | 11.53 | 4 | 8 |
| 190 | | | | | | | | | | 39,160 | 78,948 | 26,316 | 1184.2 | 3552.6 | 3434.2 | 13.16 | | |
| 290 | | | | | | | | | | 45,141 | 84,600 | 28,200 | 1269.0 | 4568.4 | 4441.5 | 16.52 | | |
| / | 55 | / | / | / | 90 | 27.5 | 9 | 14 | 8.5 | 46,991 | 72,741 | 24,247 | 1745.8 | 1697.3 | 1527.6 | 13.11 | 3 | 7 |
| | | | | | | | | | | 61,165 | 101,838 | 33,946 | 2444.1 | 3326.7 | 3564.3 | 19.44 | | |
| | | 155 | | | | | | | | 67,898 | 116,386 | 38,795 | 2793.3 | 4345.1 | 4073.5 | 25.65 | 4 | 8 |
| | | | | | | | | | | 80,829 | 145,482 | 48,494 | 3491.6 | 6789.2 | 6449.7 | 31.97 | | |
| | | | | | | | | | | 87,073 | 160,031 | 53,344 | 3840.7 | 8214.9 | 8588.3 | 38.22 | | |

## GOORC - S

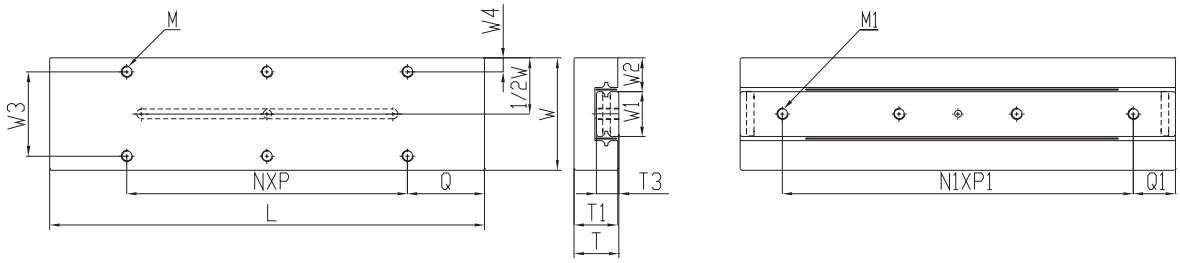


## Specification

| Model No. | Max. Stroke (mm) | Roller Dia. (mm) | Main Dimensions (mm) | | | Mounting Dimensions (mm) | | | | | | | | |
|---|---|---|---|---|---|---|---|---|---|---|---|---|---|---|
| Corrosion Resistiance | | | W | T | L | $W_3$ | $W_4$ | N*P | Q | M | $T_1$ | $W_1$ | $W_2$ | $N_1$*$P_1$ |
| GOORC20-25-S | 12 | Ø1.5 | 20±0.1 | 8±0.1 | 25 | 14 | 3 | 1*18 | 3.5 | M2.5 | 7.5 | 7 | 6.5 | 2*7.5 |
| GOORC20-35-S | 18 | | | | 35 | | | 1*28 | | | | | | 2*10 |
| GOORC20-45-S | 25 | | | | 45 | | | 1*20 | 12.5 | | | | | 3*10 |
| GOORC20-55-S | 32 | | | | 55 | | | 1*30 | | | | | | 4*10 |
| GOORC30-65-S | 40 | Ø2.0 | 30±0.1 | 12±0.1 | 65 | 22 | 4 | 1*30 | 17.5 | M3 | 11.5 | 12 | 9 | 3*15 |
| GOORC30-80-S | 50 | | | | 80 | | | 1*45 | | | | | | 4*15 |
| GOORC30-95-S | 60 | | | | 95 | | | 2*30 | | | | | | 5*15 |
| GOORC40-105-S | 60 | Ø3.0 | 40±0.1 | 16±0.1 | 105 | 30 | 5 | 1*50 | 27.5 | M4 | 15.5 | 16 | 12 | 3*25 |
| GOORC40-130-S | 75 | | | | 130 | | | 1*75 | | | | | | 4*25 |
| GOORC40-155-S | 90 | | | | 155 | | | 2*50 | | | | | | 5*25 |



| Ordering Example : | GOORC | - | 20 | - | 25 | - | S |
|---|---|---|---|---|---|---|---|
| | C type table | | Table width | | Table length | | Corrosion Resistance |

GOORC - S

## Material Specification

| Component / Material / Model No. | Table | Rail | Retainer | Roller |
|---|---|---|---|---|
| GOORC - S | SUS440C+Ni | | SUS304 | SUS440C |

Table and rail are in one unit in this series.
GRC-S No Surface finished to V-groove surface of the rail.

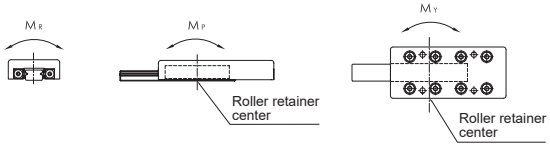


★ Each of load and torque changes oppositely in stroke variation

| $Q_1$ | $M_1$ | $T_3$ | Basic Dynamic Load Rating C(N) | Basic Static Load Rating Co(N) | Allow-Able Load Fu(N) | Static Rated Moment $M_R$ (N·m) | Static Rated Moment $M_P$ (N·m) | Static Rated Moment $M_Y$ (N·m) | Weight (kg) | Table Moving Accuracy (μm) Center Parallelism | Table Moving Accuracy (μm) Side Parallelism |
|---|---|---|---|---|---|---|---|---|---|---|---|
| 5 | M2.5 | 4 | 523 | 865 | 288 | 2.2 | 2.6 | 2.2 | 0.03 | 2 | 4 |
| 7.5 | | | 657 | 1153 | 384 | 3.0 | 4.6 | 5.2 | 0.04 | | |
| | | | 783 | 1441 | 480 | 3.7 | 7.2 | 7.9 | 0.05 | | |
| | | | 903 | 1729 | 576 | 4.4 | 10.4 | 11.2 | 0.06 | | |
| 10 | M3 | 6 | 1849 | 2924 | 975 | 12.7 | 19.5 | 21.4 | 0.16 | | 5 |
| | | | 2407 | 4093 | 1364 | 17.7 | 38.2 | 35.5 | 0.20 | | |
| | | | 2672 | 4678 | 1559 | 20.3 | 49.9 | 46.8 | 0.24 | | |
| 15 | M4 | 8 | 5646 | 10655 | 3552 | 61.8 | 124.3 | 133.2 | 0.47 | 3 | 6 |
| | | | 6872 | 13700 | 4567 | 79.5 | 205.5 | 194.1 | 0.58 | | |
| | | | 8038 | 16744 | 5581 | 97.1 | 307.0 | 293.0 | 0.70 | | |

## GOORM - S

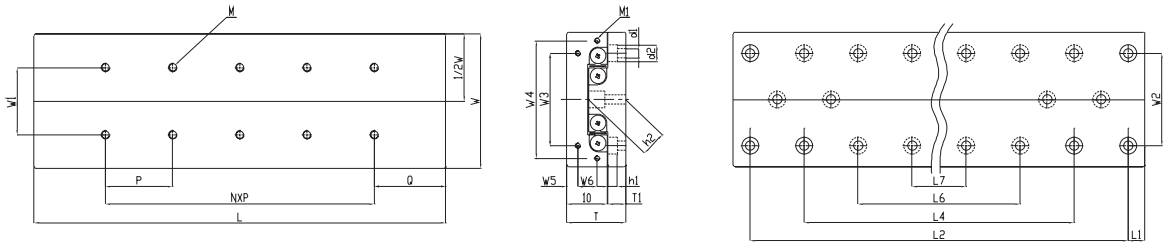


## Specification

| Model No. | Max. Stroke (mm) | Roller Dia. (mm) | Main Dimensions (mm) | | | Mounting Dimensions (mm) | | | | | | | | | | |
|---|---|---|---|---|---|---|---|---|---|---|---|---|---|---|---|---|
| Corrosion Resistiance | | | W | T | L | $T_2$ | $W_1$ | M | Q | N*P | $W_3$ | $W_5$ | $M_1$ | $W_2$ | $d_1$ | $d_2$ |
| GOORM30-25-S | 12 | Ø1.5 | 30±0.1 | 17±0.1 | 25 | 11 | 10 | M2*4L | 125 | / | 12 | 2.5 | M2*6L | 22 | 2.5 | 4.5 |
| GOORM30-35-S | 18 | | | | 35 | | | | | 1*10 | | | | | | |
| GOORM30-45-S | 25 | | | | 45 | | | | | 2*10 | | | | | | |
| GOORM30-55-S | 32 | | | | 55 | | | | | 3*10 | | | | | | |
| GOORM30-65-S | 40 | | | | 65 | | | | | 4*10 | | | | | | |
| GOORM30-75-S | 45 | | | | 75 | | | | | 5*10 | | | | | | |
| GOORM30-85-S | 50 | | | | 85 | | | | | 6*10 | | | | | | |
| GOORM40-35-S | 18 | Ø2.0 | 40±0.1 | 21±0.1 | 35 | 14 | 15 | M3*6L | 17.5 | / | 16 | 3.4 | M2*6L | 30 | 3.5 | 6.5 |
| GOORM40-50-S | 30 | | | | 50 | | | | | 1*15 | | | | | | |
| GOORM40-65-S | 40 | | | | 65 | | | | | 2*15 | | | | | | |
| GOORM40-80-S | 50 | | | | 80 | | | | | 3*15 | | | | | | |
| GOORM40-95-S | 60 | | | | 98 | | | | | 4*15 | | | | | | |
| GOORM40-110-S | 70 | | | | 110 | | | | | 5*15 | | | | | | |
| GOORM40-125-S | 80 | | | | 125 | | | | | 6*15 | | | | | | |
| GOORM40-140-S | 90 | | | | 140 | | | | | 7*15 | | | | | | |
| GOORM40-155-S | 100 | | | | 155 | | | | | 8*15 | | | | | | |
| GOORM40-170-S | 110 | | | | 170 | | | | | 9*15 | | | | | | |
| GOORM40-185-S | 120 | | | | 185 | | | | | 10*15 | | | | | | |

| Ordering Example : | GOORM | - | 30 | - | 25 | - | S |
|---|---|---|---|---|---|---|---|
| | M type table | | Table width | | Table length | | Corrosion Resistance |

## GOORM - S

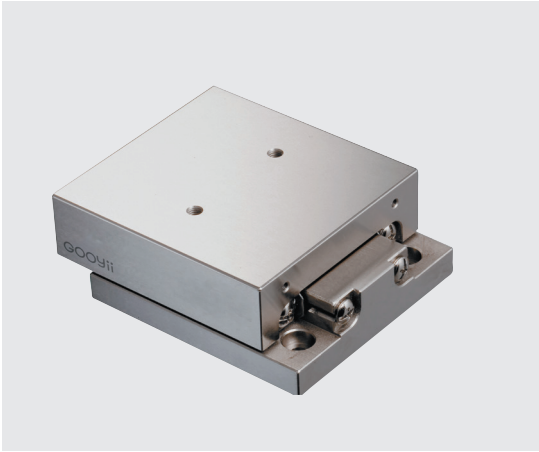

## Material Specification

| Component / Material / Model No. | Table | Rail | Retainer | Roller |
|---|---|---|---|---|
| GOORM - S | SUS440C+Ni | | SUS304 | SUS440C |

Table and rail are in one unit in this series.
GRM-S No Surface finished to V-groove surface of the rail.

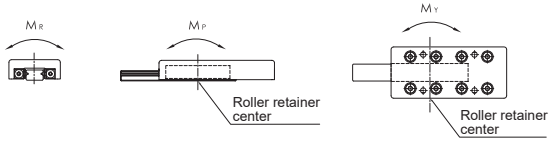


★ Each of load and torque changes oppositely in stroke variation

| $h_1$ | $T_1$ | $h_2$ | $L_1$ | $L_2$ | $L_4$ | $L_6$ | $L_7$ | Basic Dynamic Load Rating C(N) | Basic Static Load Rating Co(N) | Allow-Able Load Fu(N) | Static Rated Moment $M_R$ (N·m) | Static Rated Moment $M_P$ (N·m) | Static Rated Moment $M_Y$ (N·m) | Weight (kg) | Table Moving Accuracy (μm) Center Parallelism | Table Moving Accuracy (μm) Side Parallelism |
|---|---|---|---|---|---|---|---|---|---|---|---|---|---|---|---|---|
| 2.5 | 5.5 | 10 | 3.5 | 18 | / | / | / | 379 | 576 | 192 | 2.6 | 1.2 | 1.4 | 0.09 | 2 | 4 |
| | | | | 28 | | | | 523 | 865 | 288 | 3.9 | 2.6 | 3.0 | 0.12 | | |
| | | | | 38 | | | | 657 | 1,153 | 384 | 5.2 | 4.6 | 5.2 | 0.16 | | |
| | | | | 48 | 28 | | | 783 | 1,441 | 480 | 6.5 | 7.2 | 7.9 | 0.19 | | 5 |
| | | | | 58 | 38 | | | 903 | 1,929 | 576 | 7.8 | 10.4 | 11.2 | 0.23 | | |
| | | | | 67 | 48 | | | 1,131 | 2,306 | 769 | 10.4 | 18.4 | 17.3 | 0.26 | | |
| | | | | 78 | 58 | | | 1,240 | 2,594 | 865 | 11.7 | 23.3 | 22.0 | 0.30 | | |
| 3.5 | 6.5 | 13 | 5 | 25 | / | / | / | 895 | 1,170 | 390 | 7.0 | 3.1 | 3.9 | 0.20 | 2 | 4 |
| | | | | 40 | | | | 1,552 | 2,339 | 780 | 14.0 | 12.5 | 10.9 | 0.29 | | |
| | | | | 55 | | | | 1,849 | 2,924 | 975 | 17.5 | 19.5 | 17.5 | 0.38 | | 5 |
| | | | | 70 | 40 | | | 2,134 | 3,509 | 1,170 | 21.1 | 28.1 | 30.4 | 0.46 | | |
| | | | | 85 | 55 | | | 2,407 | 4,093 | 1,364 | 24.6 | 38.2 | 40.9 | 0.55 | | |
| | | | | 100 | 70 | | | 2,930 | 5,263 | 1,754 | 31.6 | 63.2 | 59.6 | 0.64 | 3 | 6 |
| | | | | 115 | 85 | | | 3,181 | 5,848 | 1,949 | 35.1 | 78.0 | 74.1 | 0.72 | | |
| | | | | 130 | 100 | 70 | | 3,427 | 6,433 | 2,144 | 38.6 | 94.3 | 98.6 | 0.83 | | |
| | | | | 145 | 115 | 85 | | 3,668 | 7,017 | 2,339 | 42.1 | 112.3 | 117.0 | 0.90 | | |
| | | | | 160 | 130 | 100 | | 4,136 | 8,187 | 2,729 | 49.1 | 152.8 | 147.4 | 0.99 | | 7 |
| | | | | 175 | 145 | 115 | 85 | 4,365 | 8,772 | 2,924 | 52.6 | 175.4 | 169.6 | 1.07 | | |

## GOORM - S

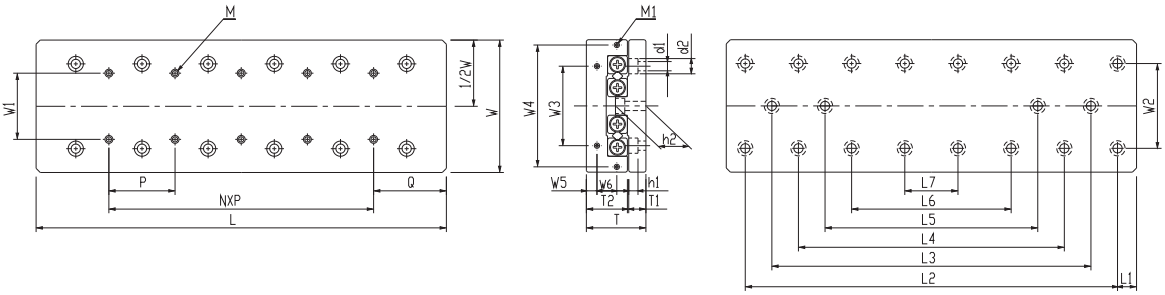


## Specification

| Model No. | Max. Stroke (mm) | Roller Dia. (mm) | Main Dimensions (mm) | | | Mounting Dimensions (mm) | | | | | | | | | | |
|---|---|---|---|---|---|---|---|---|---|---|---|---|---|---|---|---|
| Corrosion Resistiance | | | W | T | L | $T_2$ | $W_1$ | M | Q | N*P | $W_3$ | $W_5$ | $M_1$ | $W_2$ | $d_1$ | $d_2$ |
| GOORM60-55-S | 30 | Ø3.0 | 60±0.1 | 28±0.1 | 55 | 18.5 | 25 | M4*8L | 27.5 | / | 40 | 5.5 | M3*6L | 40 | 4.5 | 8 |
| GOORM60-80-S | 45 | | | | 80 | | | | | 1*25 | | | | | | |
| GOORM60-105-S | 60 | | | | 105 | | | | | 2*25 | | | | | | |
| GOORM60-130-S | 75 | | | | 130 | | | | | 3*25 | | | | | | |
| GOORM60-155-S | 90 | | | | 155 | | | | | 4*25 | | | | | | |
| GOORM60-180-S | 105 | | | | 180 | | | | | 5*25 | | | | | | |
| GOORM60-205-S | 130 | | | | 205 | | | | | 6*25 | | | | | | |
| GOORM60-230-S | 155 | | | | 230 | | | | | 7*25 | | | | | | |
| GOORM60-255-S | 180 | | | | 255 | | | | | 8*25 | | | | | | |
| GOORM60-280-S | 205 | | | | 280 | | | | | 9*25 | | | | | | |
| GOORM60-305-S | 230 | | | | 305 | | | | | 10*25 | | | | | | |
| GOORM80-85-S | 50 | Ø4.0 | 80±0.1 | 35±0.1 | 85 | 24 | 40 | M5*10L | 42.5 | / | 55 | 6.5 | M3*6L | 55 | 5.5 | 10 |
| GOORM80-125-S | 75 | | | | 125 | | | | | 1*40 | | | | | | |
| GOORM80-165-S | 105 | | | | 165 | | | | | 2*40 | | | | | | |
| GOORM80-205-S | 130 | | | | 205 | | | | | 3*40 | | | | | | |
| GOORM80-245-S | 155 | | | | 245 | | | | | 4*40 | | | | | | |
| GOORM80-285-S | 185 | | | | 285 | | | | | 5*40 | | | | | | |
| GOORM80-325-S | 210 | | | | 325 | | | | | 6*40 | | | | | | |
| GOORM80-365-S | 235 | | | | 365 | | | | | 7*40 | | | | | | |
| GOORM80-405-S | 265 | | | | 405 | | | | | 8*40 | | | | | | |

| Ordering Example : | GOORM | - | 60 | - | 55 | - | S |
|---|---|---|---|---|---|---|---|
| | M type table | | Table width | | Table length | | Corrosion Resistance |

## GOORM - S

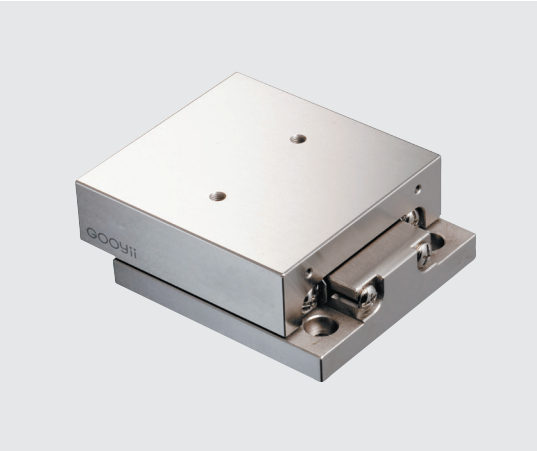

## Material Specification

| Component / Material / Model No. | Table | Rail | Retainer | Roller |
|---|---|---|---|---|
| GOORM - S | SUS440C+Ni | | SUS304 | SUS440C |

Table and rail are in one unit in this series.
GRM-S No Surface finished to V-groove surface of the rail.

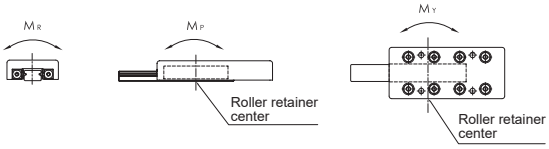


★ Each of load and torque changes oppositely in stroke variation

| $h_1$ | $T_1$ | $h_2$ | $L_1$ | $L_2$ | $L_3$ | $L_4$ | $L_5$ | Basic Dynamic Load Rating C(N) | Basic Static Load Rating Co(N) | Allow-Able Load Fu(N) | Static Rated Moment $M_R$ (N·m) | Static Rated Moment $M_P$ (N·m) | Static Rated Moment $M_Y$ (N·m) | Weight (kg) | Table Moving Accuracy (μm) Center Parallelism | Table Moving Accuracy (μm) Side Parallelism |
|---|---|---|---|---|---|---|---|---|---|---|---|---|---|---|---|---|
| 4.5 | 9 | 17.5 | 10 | 35 | / | / | / | 2,901 | 4,567 | 1,522 | 42.6 | 22.8 | 26.6 | 0.65 | 2 | 5 |
| | | | | 60 | | | | 4,338 | 7,611 | 2,537 | 71.0 | 63.4 | 57.1 | 0.95 | | |
| | | | | 85 | | | | 5,646 | 10,655 | 3,552 | 99.8 | 124.3 | 115.4 | 1.25 | 3 | 6 |
| | | | | 110 | | | | 6,268 | 12,178 | 4,059 | 113.7 | 162.4 | 172.5 | 1.55 | | |
| | | | | 135 | 85 | | | 7,492 | 15,222 | 5,074 | 142.1 | 253.7 | 266.4 | 1.85 | | |
| | | | | 160 | 110 | | | 8,603 | 18,266 | 6,089 | 170.5 | 365.3 | 350.1 | 2.15 | | 7 |
| | | | | 185 | 135 | 85 | | 9,157 | 19,789 | 6,596 | 184.7 | 428.8 | 445.2 | 2.44 | | |
| | | | | 210 | 160 | 110 | | 9,702 | 21,311 | 7,104 | 198.9 | 497.3 | 515.0 | 2.74 | | |
| | | | | 235 | 185 | 135 | | 10,767 | 24,355 | 8,118 | 227.3 | 649.5 | 629.2 | 3.04 | | |
| | | | | 260 | 210 | 160 | 110 | 11,288 | 25,877 | 8,626 | 241.5 | 733.2 | 711.6 | 3.33 | | |
| | | | | 285 | 235 | 185 | 135 | 11,802 | 27,400 | 9,133 | 255.7 | 822.0 | 844.8 | 3.63 | | |
| 5.4 | 10.5 | 22 | 10 | 60 | / | / | / | 6,617 | 9,357 | 3,119 | 124.8 | 87.3 | 76.4 | 1.68 | 2 | 5 |
| | | | | 105 | | | | 9,097 | 14,035 | 4,678 | 187.1 | 196.5 | 180.1 | 2.48 | 3 | 6 |
| | | | | 145 | | | | 10,264 | 16,375 | 5,458 | 218.3 | 267.5 | 286.6 | 3.27 | | 7 |
| | | | | 185 | 105 | | | 12,492 | 21,035 | 7,018 | 280.7 | 442.1 | 466.7 | 4.06 | | |
| | | | | 225 | 145 | | | 14,612 | 25,732 | 8,577 | 343.1 | 660.4 | 690.5 | 4.86 | | |
| | | | | 265 | 185 | | | 16,646 | 30,410 | 10,137 | 405.5 | 922.4 | 957.9 | 5.66 | | |
| | | | | 305 | 225 | 145 | | 18,612 | 35,089 | 11,696 | 467.8 | 1228.1 | 1269.0 | 6.44 | 4 | 8 |
| | | | | 345 | 265 | 185 | | 20,519 | 39,767 | 13,256 | 530.2 | 1577.4 | 1623.8 | 7.24 | | |
| | | | | 385 | 305 | 225 | | 22,377 | 44,445 | 14,815 | 592.6 | 1970.4 | 1918.6 | 8.04 | | |

## GOORM - S

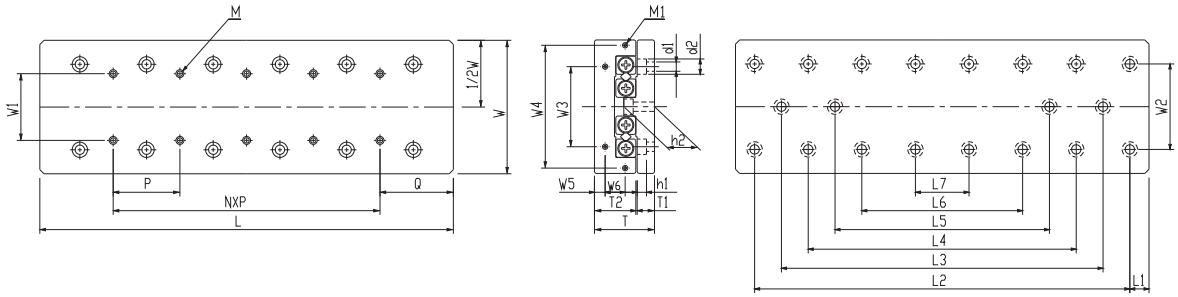


## Specification

| Model No. | Max. Stroke (mm) | Roller Dia. (mm) | Main Dimensions (mm) | | | Mounting Dimensions (mm) | | | | | | | | | | | |
|---|---|---|---|---|---|---|---|---|---|---|---|---|---|---|---|---|---|
| Corrosion Resistiance | | | W | T | L | $T_2$ | $W_1$ | M | Q | N*P | $W_3$ | $W_4$ | $W_5$ | $W_6$ | $M_1$ | $W_2$ | $d_1$ |
| GOORM100-110-S | 60 | Ø6.0 | 100±0.1 | 45±0.1 | 110 | 31 | 50 | M6*12L | 55 | / | 60 | 92 | 8 | 15 | M4*8L | 60 | 7 |
| GOORM100-160-S | 95 | | | | 160 | | | | | 1*50 | | | | | | | |
| GOORM100-210-S | 130 | | | | 210 | | | | | 2*50 | | | | | | | |
| GOORM100-260-S | 165 | | | | 260 | | | | | 3*50 | | | | | | | |
| GOORM100-310-S | 200 | | | | 310 | | | | | 4*50 | | | | | | | |
| GOORM100-360-S | 235 | | | | 360 | | | | | 5*50 | | | | | | | |
| GOORM100-410-S | 265 | | | | 410 | | | | | 6*50 | | | | | | | |
| GOORM100-460-S | 300 | | | | 460 | | | | | 7*50 | | | | | | | |
| GOORM100-510-S | 335 | | | | 510 | | | | | 8*50 | | | | | | | |



| Ordering Example : | GOORM | - | 100 | - | 110 | - | S |
|---|---|---|---|---|---|---|---|
| | M type table | | Table width | | Table length | | Corrosion Resistance |

## GOORM - S

## Material Specification

| Component / Material / Model No. | Table | Rail | Retainer | Roller |
|---|---|---|---|---|
| GOORM - S | SUS440C+Ni | | SUS304 | SUS440C |

Table and rail are in one unit in this series.
GRM-S No Surface finished to V-groove surface of the rail.

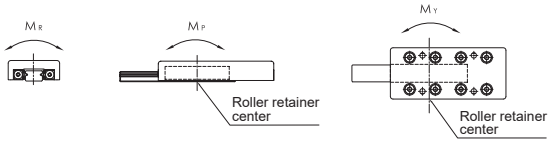


★ Each of load and torque changes oppositely in stroke variation

| $d_2$ | $h_1$ | $T_1$ | $h_2$ | $L_1$ | $L_2$ | $L_3$ | $L_4$ | $L_5$ | Basic Dynamic Load Rating C(N) | Basic Static Load Rating Co(N) | Allow-Able Load Fu(N) | Static Rated Moment $M_R$ (N·m) | Static Rated Moment $M_P$ (N·m) | Static Rated Moment $M_Y$ (N·m) | Weight (kg) | Table Moving Accuracy (μm) Center Parallelism | Table Moving Accuracy (μm) Side Parallelism |
|---|---|---|---|---|---|---|---|---|---|---|---|---|---|---|---|---|---|
| 11.5 | 7 | 13 | 29 | 10 | 90 | / | / | / | 13,923 | 21,053 | 7,018 | 315.8 | 252.6 | 221.1 | 3.45 | 3 | 6 |
| | | | | | 140 | | | | 16,592 | 26,316 | 8,772 | 394.7 | 394.7 | 646.2 | 5.05 | | |
| | | | | | 190 | 90 | | | 21,596 | 36,842 | 12,281 | 522.6 | 773.9 | 828.9 | 6.63 | | 7 |
| | | | | | 240 | 140 | | | 26,285 | 49,369 | 15,790 | 710.5 | 1279.0 | 1207.9 | 8.23 | | |
| | | | | | 290 | 190 | | | 30,744 | 57,895 | 19,298 | 868.4 | 1910.5 | 1823.7 | 9.84 | | |
| | | | | | 340 | 240 | 140 | | 35,024 | 68,421 | 22,807 | 1026.3 | 2668.4 | 2565.8 | 11.41 | 4 | 8 |
| | | | | | 390 | 290 | 190 | | 39,160 | 78,948 | 26,316 | 1184.2 | 3552.6 | 3434.2 | 13.01 | | |
| | | | | | 440 | 340 | 240 | | 41,481 | 84,211 | 28,070 | 1263.2 | 4042.1 | 4168.4 | 14.61 | | |
| | | | | | 490 | 390 | 290 | 190 | 45,141 | 94,737 | 31,579 | 1421.1 | 5115.8 | 5257.9 | 16.20 | | |

## GOORH - S

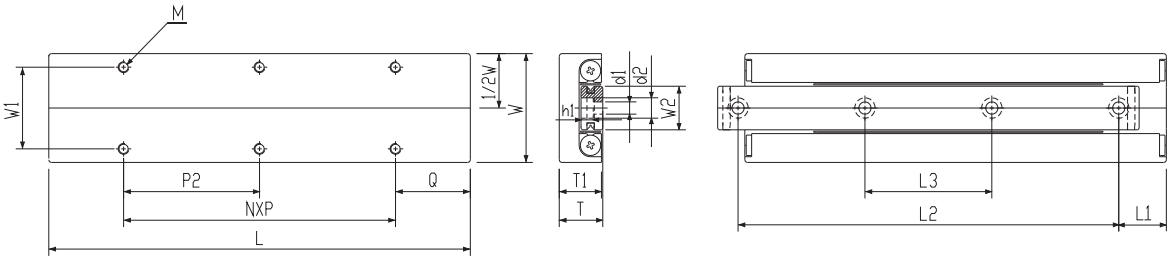


## Specification

| Model No. | Max. Stroke (mm) | Roller Dia. (mm) | Main Dimensions (mm) | | | Mounting Dimensions (mm) | | | | | | | |
|---|---|---|---|---|---|---|---|---|---|---|---|---|---|
| Corrosion Resistiance | | | W | T | L | $T_1$ | $W_2$ | $W_1$ | M | Q | N*P | $d_1$ | $d_2$ |
| GOORH20-25-S | 12 | Ø1.5 | 20±0.1 | 8±0.1 | 25 | 7.5 | 6.6 | 14 | M2.5*3.5L | 3.5 | 1*18 | 2.5 | 4.1 |
| GOORH20-35-S | 18 | | | | 35 | | | | | | 1*28 | | |
| GOORH20-45-S | 25 | | | | 45 | | | | | 12.5 | 1*20 | | |
| GOORH20-55-S | 32 | | | | 55 | | | | | | 1*30 | | |
| GOORH20-65-S | 40 | | | | 65 | | | | | | 2*20 | | |
| GOORH20-75-S | 45 | | | | 75 | | | | | 22.5 | 1*30 | | |
| GOORH20-85-S | 50 | | | | 85 | | | | | 12.5 | 2*30 | | |
| GOORH30-35-S | 18 | Ø2.0 | 30±0.1 | 12±0.1 | 35 | 11.5 | 12.0 | 22 | M3*5.5L | 3.5 | 1*28 | 3.5 | 6 |
| GOORH30-50-S | 30 | | | | 50 | | | | | | 1*43 | | |
| GOORH30-65-S | 40 | | | | 65 | | | | | 17.5 | 1*30 | | |
| GOORH30-80-S | 50 | | | | 80 | | | | | | 1*45 | | |
| GOORH30-95-S | 60 | | | | 95 | | | | | | 2*30 | | |
| GOORH30-110-S | 70 | | | | 110 | | | | | 32.5 | 1*45 | | |
| GOORH30-125-S | 80 | | | | 125 | | | | | 17.5 | 2*45 | | |
| GOORH40-55-S | 30 | Ø3.0 | 40±0.1 | 16±0.1 | 55 | 15.5 | 16 | 30 | M4*7.5L | 7.5 | 1*40 | 4.5 | 7.5 |
| GOORH40-80-S | 45 | | | | 80 | | | | | | 1*65 | | |
| GOORH40-105-S | 60 | | | | 105 | | | | | 27.5 | 1*50 | | |
| GOORH40-130-S | 75 | | | | 130 | | | | | | 1*75 | | |
| GOORH40-155-S | 90 | | | | 155 | | | | | | 2*50 | | |
| GOORH40-180-S | 105 | | | | 180 | | | | | 52.5 | 1*75 | | |
| GOORH40-205-S | 130 | | | | 205 | | | | | 27.5 | 2*75 | | |

| Ordering Example : | GOORH | - | 20 | - | 25 | - | S |
|---|---|---|---|---|---|---|---|
| | H type table | | Table width | | Table length | | Corrosion Resistance |

## GOORH - S

## Material Specification

| Component / Material / Model No. | Table | Rail | Retainer | Roller |
|---|---|---|---|---|
| GOORH - S | SUS440C+Ni | | SUS304 | SUS440C |

Table and rail are in one unit in this series.
GRH-S No Surface finished to V-groove surface of the rail.

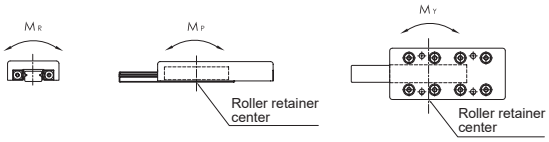


★ Each of load and torque changes oppositely in stroke variation

| $h_1$ | $L_1$ | $L_2$ | $L_3$ | Basic Dynamic Load Rating C(N) | Basic Static Load Rating Co(N) | Allow-Able Load Fu(N) | Static Rated Moment $M_R$ (N·m) | Static Rated Moment $M_P$ (N·m) | Static Rated Moment $M_Y$ (N·m) | Weight (kg) | Table Moving Accuracy (μm) Center Parallelism | Table Moving Accuracy (μm) Side Parallelism |
|---|---|---|---|---|---|---|---|---|---|---|---|---|
| 2.2 | 3.5 | 18 | / | 379 | 576 | 192 | 1.4 | 1.2 | 1.4 | 0.02 | 2 | 4 |
| | 5 | 25 | | 523 | 865 | 288 | 2.2 | 2.6 | 3.0 | 0.03 | | |
| | 3.5 | 38 | 25 | 657 | 1,153 | 384 | 2.9 | 4.6 | 5.2 | 0.04 | | 5 |
| | | 48 | 29 | 783 | 1,441 | 480 | 3.6 | 7.2 | 7.9 | 0.05 | | |
| | 5 | 55 | 31 | 903 | 1,729 | 576 | 4.3 | 10.4 | 11.2 | 0.06 | | |
| | | 65 | 35 | 1,131 | 2,306 | 769 | 5.8 | 18.4 | 17.3 | 0.07 | | |
| | | 75 | 40 | 1,240 | 2,594 | 865 | 6.5 | 23.3 | 22.0 | 0.08 | | |
| 3.3 | 5 | 25 | / | 895 | 1,170 | 390 | 5.1 | 3.1 | 3.9 | 0.08 | 2 | 4 |
| | 7.5 | 35 | | 1,552 | 2,339 | 780 | 10.1 | 12.5 | 10.9 | 0.12 | | |
| | 5 | 55 | 33 | 1,849 | 2,924 | 975 | 12.7 | 19.5 | 17.5 | 0.15 | | 5 |
| | | 70 | 40 | 2,164 | 3,509 | 1,170 | 15.2 | 28.1 | 30.4 | 0.19 | | |
| | | 85 | 45 | 2,407 | 4,093 | 1,364 | 17.7 | 38.2 | 40.9 | 0.22 | | |
| | 7.5 | 95 | 50 | 2,930 | 5,263 | 1,754 | 22.8 | 63.2 | 59.6 | 0.26 | | |
| | | 110 | 55 | 3,181 | 5,848 | 1,949 | 25.3 | 78.0 | 74.1 | 0.29 | | |
| 4.5 | 7.5 | 40 | / | 2,901 | 4,567 | 1,522 | 26.5 | 22.8 | 26.6 | 0.23 | 2 | 5 |
| | 6 | 65 | 43 | 4,338 | 7,611 | 2,537 | 44.1 | 63.4 | 57.1 | 0.34 | | |
| | 7.5 | 90 | 55 | 5,646 | 10,655 | 3,552 | 61.8 | 124.3 | 115.4 | 0.45 | 3 | |
| | | 115 | 65 | 6,268 | 12,178 | 4,059 | 70.6 | 162.4 | 172.5 | 0.56 | | |
| | | 140 | 95 | 7,462 | 15,222 | 5,074 | 88.3 | 253.7 | 266.4 | 0.66 | | |
| | | 165 | 85 | 8,603 | 18,266 | 6,089 | 105.9 | 365.3 | 350.1 | 0.78 | | |
| | | 190 | 90 | 9,157 | 19,789 | 6,596 | 114.8 | 428.8 | 445.2 | 0.88 | | |

## GOORS - S

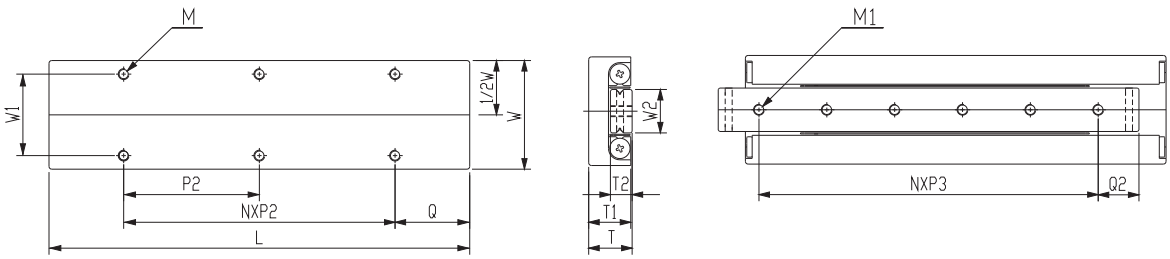


## Specification

| Model No. | Max. Stroke (mm) | Roller Dia. (mm) | Main Dimensions (mm) | | | Mounting Dimensions (mm) | | | | | | | |
|---|---|---|---|---|---|---|---|---|---|---|---|---|---|
| Corrosion Resistiance | | | W | T | L | $T_1$ | $T_2$ | $W_2$ | $W_1$ | M | $M_1$ | Q | $Q_2$ |
| GOORS20-25-S | 12 | 1.5 | 20±0.1 | 8±0.1 | 25 | 7.5 | 4 | 6.6 | 14 | M2.5*3.5L | M2.6 | 3.5 | 5 |
| GOORS20-35-S | 18 | | | | 35 | | | | | | | | 7.5 |
| GOORS20-45-S | 25 | | | | 45 | | | | | | | 12.5 | |
| GOORS20-55-S | 32 | | | | 55 | | | | | | | | |
| GOORS20-65-S | 40 | | | | 65 | | | | | | | | |
| GOORS20-75-S | 45 | | | | 75 | | | | | | | 22.5 | |
| GOORS20-85-S | 50 | | | | 85 | | | | | | | 12.5 | |
| GOORS30-35-S | 18 | 2.0 | 30±0.1 | 12±0.1 | 35 | 11.5 | 6 | 12 | 22 | M3*5.5L | M3 | 3.5 | 7.5 |
| GOORS30-50-S | 30 | | | | 50 | | | | | | | | 10 |
| GOORS30-65-S | 40 | | | | 65 | | | | | | | 17.5 | |
| GOORS30-80-S | 50 | | | | 80 | | | | | | | | |
| GOORS30-95-S | 60 | | | | 95 | | | | | | | | |
| GOORS30-110-S | 70 | | | | 110 | | | | | | | 32.5 | |
| GOORS30-125-S | 80 | | | | 125 | | | | | | | 17.5 | |
| GOORS40-55-S | 30 | 3.0 | 40±0.1 | 16±0.1 | 55 | 15.5 | 8 | 16 | 30 | M4*7.5L | M4*7.5L | 7.5 | 10 |
| GOORS40-80-S | 45 | | | | 80 | | | | | | | | 15 |
| GOORS40-105-S | 60 | | | | 105 | | | | | | | 27.5 | |
| GOORS40-130-S | 75 | | | | 130 | | | | | | | | |
| GOORS40-155-S | 90 | | | | 155 | | | | | | | | |
| GOORS40-180-S | 105 | | | | 180 | | | | | | | 52.5 | |
| GOORS40-205-S | 130 | | | | 205 | | | | | | | 27.5 | |

| Ordering Example : | GOORS | - | 20 | - | 25 | - | S |
|---|---|---|---|---|---|---|---|
| | S type table | | Table width | | Table length | | Corrosion Resistance |

GOORS - S

## Material Specification

| Component / Material / Model No. | Table | Rail | Retainer | Roller |
|---|---|---|---|---|
| GOORS - S | SUS440C+Ni | | SUS304 | SUS440C |

Table and rail are in one unit in this series.
GRS-S No Surface finished to V-groove surface of the rail.

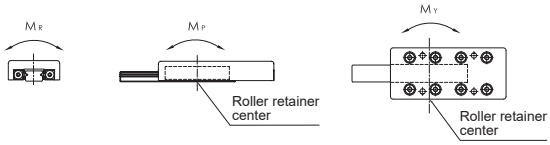


★ Each of load and torque changes oppositely in stroke variation

| $N*P_2$ | $N*P_3$ | Basic Dynamic Load Rating C(N) | Basic Static Load Rating Co(N) | Allow-Able Load Fu(N) | Static Rated Moment $M_R$ (N·m) | Static Rated Moment $M_P$ (N·m) | Static Rated Moment $M_Y$ (N·m) | Weight (kg) | Table Moving Accuracy (μm) Center Parallelism | Table Moving Accuracy (μm) Side Parallelism |
|---|---|---|---|---|---|---|---|---|---|---|
| 1*18 | 2*7.5 | 379 | 576 | 192 | 1.4 | 1.2 | 1.4 | 0.02 | 2 | 4 |
| 1*28 | 2*10 | 523 | 865 | 288 | 2.4 | 2.6 | 3.0 | 0.03 | | |
| 1*20 | 3*10 | 657 | 1,153 | 384 | 2.9 | 4.6 | 5.2 | 0.04 | | 5 |
| 1*30 | 4*10 | 783 | 1,441 | 480 | 3.6 | 7.2 | 7.9 | 0.05 | | |
| 2*20 | 5*10 | 903 | 1,729 | 576 | 4.3 | 10.4 | 11.2 | 0.06 | | |
| 1*30 | 6*10 | 1,131 | 2,306 | 769 | 5.8 | 18.4 | 17.3 | 0.07 | | |
| 2*30 | 7*10 | 1,240 | 2,594 | 865 | 6.5 | 23.3 | 22.0 | 0.08 | | |
| 1*28 | 1*20 | 895 | 1,170 | 390 | 5.1 | 3.1 | 3.9 | 0.08 | 2 | 4 |
| 1*43 | 2*15 | 1,552 | 2,339 | 780 | 10.1 | 12.5 | 10.9 | 0.12 | | |
| 1*30 | 3*15 | 1,849 | 2,924 | 975 | 12.7 | 19.5 | 17.5 | 0.15 | | 5 |
| 1*45 | 4*15 | 2,134 | 3,509 | 1170 | 15.2 | 28.1 | 30.4 | 0.19 | | |
| 2*30 | 5*15 | 2,407 | 4,093 | 1364 | 17.7 | 38.2 | 40.9 | 0.22 | | |
| 1*45 | 6*15 | 2,930 | 5,263 | 1754 | 22.8 | 63.2 | 59.6 | 0.26 | | |
| 2*45 | 7*15 | 3,181 | 5,848 | 1949 | 25.3 | 78.0 | 74.1 | 0.30 | | |
| 1*40 | 1*40 | 2,901 | 4,567 | 1522 | 26.5 | 22.8 | 26.6 | 0.23 | 2 | 5 |
| 1*65 | 1*65 | 4,338 | 7,611 | 2,537 | 44.1 | 63.4 | 57.1 | 0.34 | | |
| 1*50 | 1*50 | 5,646 | 10,655 | 3,552 | 61.8 | 124.3 | 115.4 | 0.45 | 3 | |
| 1*75 | 1*75 | 6,268 | 12,178 | 4,059 | 70.6 | 162.4 | 172.5 | 0.56 | | |
| 2*50 | 2*50 | 7,462 | 15,222 | 5,074 | 88.3 | 253.7 | 266.4 | 0.67 | | |
| 1*75 | 1*75 | 8,603 | 18,266 | 6,089 | 105.9 | 365.3 | 350.1 | 0.78 | | |
| 2*75 | 2*75 | 9,157 | 19,789 | 6,596 | 114.8 | 428.8 | 445.2 | 0.89 | | |

GOOYII

# Miniature Guide Way

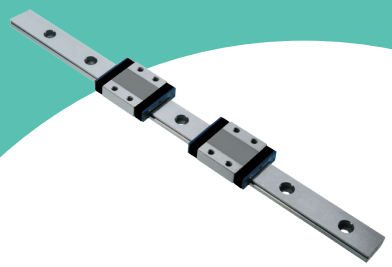

# 軌道材質&滑塊尺寸

| | | | |
|---|---|---|---|
| 不銹鋼/碳鋼系列 | 【標準型】 | 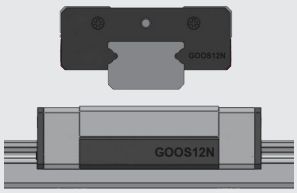 | 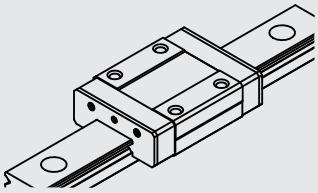 |
| | 【標準型】加長型 | 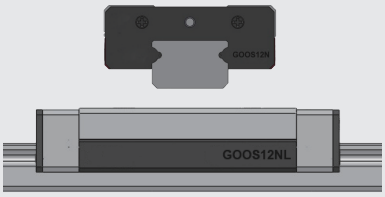 | 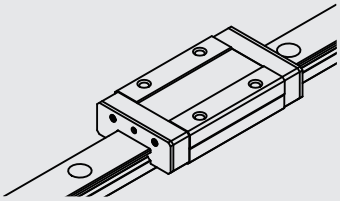 |
| | 【寬幅型】 | 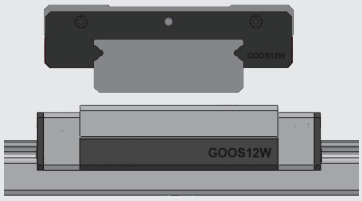 | 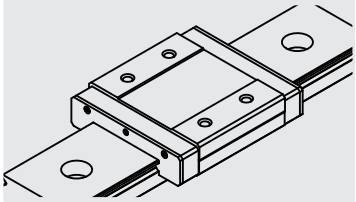 |
| | 【寬幅型】加長型 | | 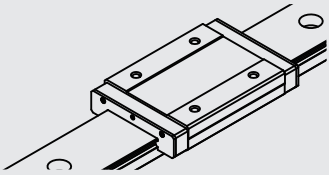 |

| 型號 | 軌道尺寸(□□) | | | | |
|---|---|---|---|---|---|
| | 05 | 07 | 09 | 12 | 15 |
| GOOS□□-N-N | ✓ | ✓ | ✓ | ✓ | ✓ |
| GOOS□□-N-L | ✓ | ✓ | ✓ | ✓ | ✓ |
| GOOS□□-W-N | ✓ | ✓ | ✓ | ✓ | ✓ |
| GOOS□□-W-L | ✓ | ✓ | ✓ | ✓ | ✓ |

*碳鋼系列不適用於05型

## Product Structure

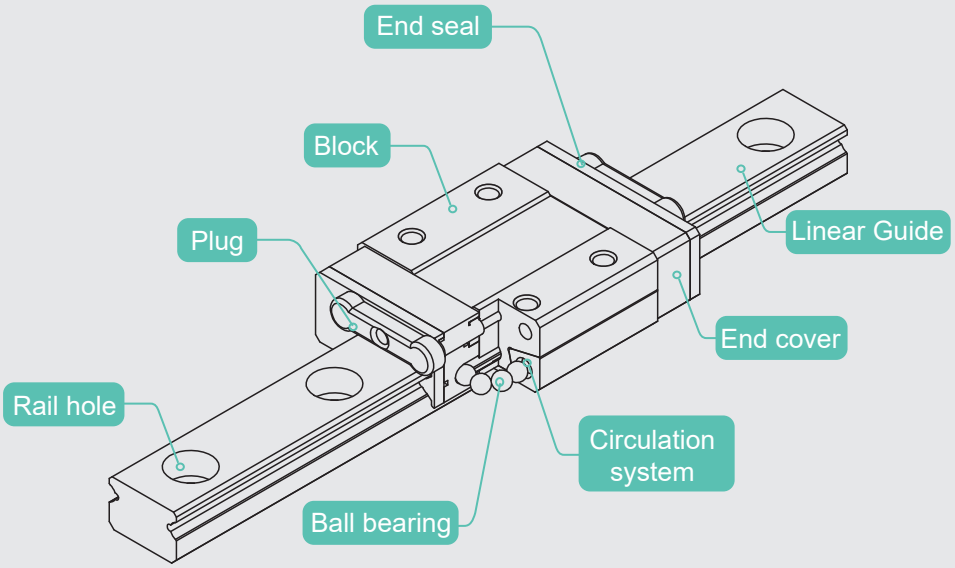


## Product Character

- ◎ 4 contact points formed by circulated ball bearings in 45 degrees contact to the guide rail surface to produce an even-loading performance of each side of the guide.
- ◎ Circulation system is a plastic part designed to reduce friction noise during block running.
- ◎ End and bottom seals design to prevent dust and foreign objects entering from block running, to extend product usage life.

### 【Standard Rail Width】

- ◎ Fit to low profile equipment.
- ◎ Stainless steel material
- ◎ High rigidity and accuracy.

### 【Wide Rail Width】

- ◎ Suitable for single axis usage.
- ◎ High loading capacity.
- ◎ High rigidity and accuracy.
- ◎ Stainless steel material.

## 產品特色

◎ 微型滑軌是採用兩列哥德式軌道設計，滾珠相連45°做循環式設計，達到四點接觸，具等負荷的效果。

◎ 迴流道採用塑膠射出成型，大幅降低滾珠與金屬碰撞產生的噪音。

◎ 密封式刮刷片及滑座底部防塵設計，大幅降低灰塵及異物進入，延長使用壽命。

◎ 鋼珠邊設有鋼絲保持器，防止鋼珠掉落。

◎ **具有穩定的精度控制，同型線軌間可互換滑塊，並保持相同的順暢度、精度與預壓，也方便組裝及維修。**

### 【標準型】

◎ 適合用在體積小的設備。
◎ 不銹鋼材質。
◎ 剛性強、精度高。
◎ 具有保持器。

### 【寬幅型】

◎ 單軸可使用。
◎ 負荷力高。
◎ 剛性強、精度高。
◎ 不銹鋼材質。
◎ 具有保持器。

### 【軌道碳鋼型】

◎ 經濟實惠。
◎ 搭配表處防銹能力佳。
◎ 與不銹鋼系列尺寸相同

## Accuracy Reference Table

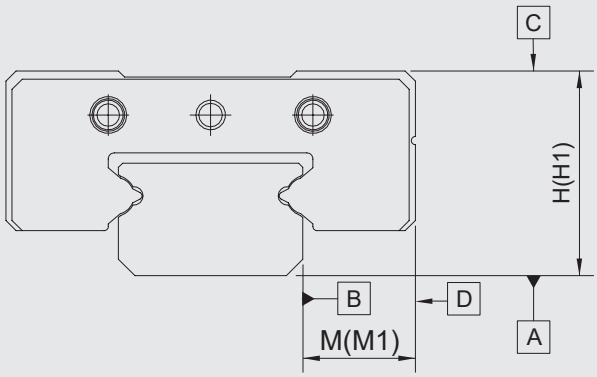


| Accuracy Reference of GSN and GSW | | | | |
|---|---|---|---|---|
| Accuracy | Code | Standard (N) | High (H) | Precision |
| H tolerance | H | ±35(μm) | ±15(μm) | ±10(μm) |
| H tolerance between multiple blocks | H1 | 20(μm) | 15(μm) | 10(μm) |
| M tolerance | M | ±35(μm) | ±15(μm) | ±10(μm) |
| M tolerance between multiple blocks | M1 | 25(μm) | 15(μm) | 10(μm) |

| Dynamics Straightness (A-C)/(B-D) Compare to Rail Length | | | |
|---|---|---|---|
| Rail Length | Accuracy | | |
| | Standard Grade(N) | High Grade (H) | Precision Grade (P) |
| 50Less | 12 | 6 | 2 |
| 50-100 | 14 | 8 | 4 |
| 100~200 | 15 | 9 | 4 |
| 200~300 | 17 | 11 | 5 |
| 300~400 | 18 | 11 | 6 |
| 400~500 | 19 | 12 | 6 |
| 500~600 | 20 | 13 | 7 |
| 600~700 | 21 | 13 | 7 |
| 700~800 | 22 | 14 | 8 |
| 800~900 | 23 | 16 | 9 |
| 900~1000 | 25 | 18 | 11 |

# Usage Life Calculation

Usage life is a total moving distance achieved while the contact surface between the guide rails has been scratched that means limited critical conditions are produced after contact friction force circulated continuously between ball bearings and guide rails surface during block running with loading.

### ◎ Rated Usage Life Definition

Rated usage life means 90% of the tested linear guide rail surface without scratch situation from a certain quantity of linear guide moving under same conditions and rated loading.

### ◎ Usage Life Calcuation

Usage life is considered basic rated loading and total loading for calculation due to different working conditions.

C : Basic rated dynamic loading(kN)
L : Rated usage life(km)
$P_c$ : Radial loading calculation(kN)
$f_t$ : Temperature factor
$f_w$ : Loading factor

$$L = \left(\frac{f_t}{f_W} \cdot \frac{C}{P_C}\right)^{10/3} \times 100$$

### ◎ Usage Life Time($L_h$)

Please refer to the following calculation formula to have an idea usage life time if stroke and repeatable cycles per minute are fixed situation upon rated usage life figure is calculated.

$L_h$ : Working life hours (hr)
$\ell_s$ : Stroke length (mm)
$n_1$ : Travel times per minute (min1)

$$L_h = \frac{L \times 10^6}{2 \times \ell_s \times n_1 \times 60}$$

# Life Factor

### ◎ Hardness Factor($f_h$)

Hardness of contact surface on cycling guide rails requires HRC56-58. Guide rail rated life and usage life will be reduced in case lower hardness. Use Hardness factor shown on (Fig. 1) to multiple the rated dynamic and static loading equals to available reference figures.

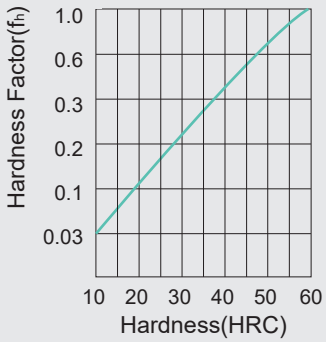

(Fig. 1)

### ◎ Temperature Factor($f_t$)

Use Temperature factor shown on (Fig. 2) to multiple the basic rated loading equals to available reference figures when the working environment temperature is more than 100℃.

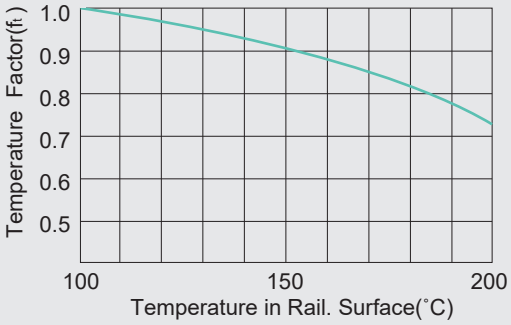

(Fig. 2)

### ◎ Loading Factor($f_w$)

Use the following loading factor (fW) generated from experienced vibration & drive force to calculate a reference loading figure due to rapid vibration or strong drive force during high speed running. As hardly getting precise calculations.

| Vibration / Drive Force | Velocity (V) | Loading Factor ($f_W$) |
|---|---|---|
| Softly | Slight speed V≦0.25m/s | 1~1.2 |
| Light | Low speed 0.25< V≦1m/s | 1.2~1.5 |

安裝說明

## 安裝尺寸

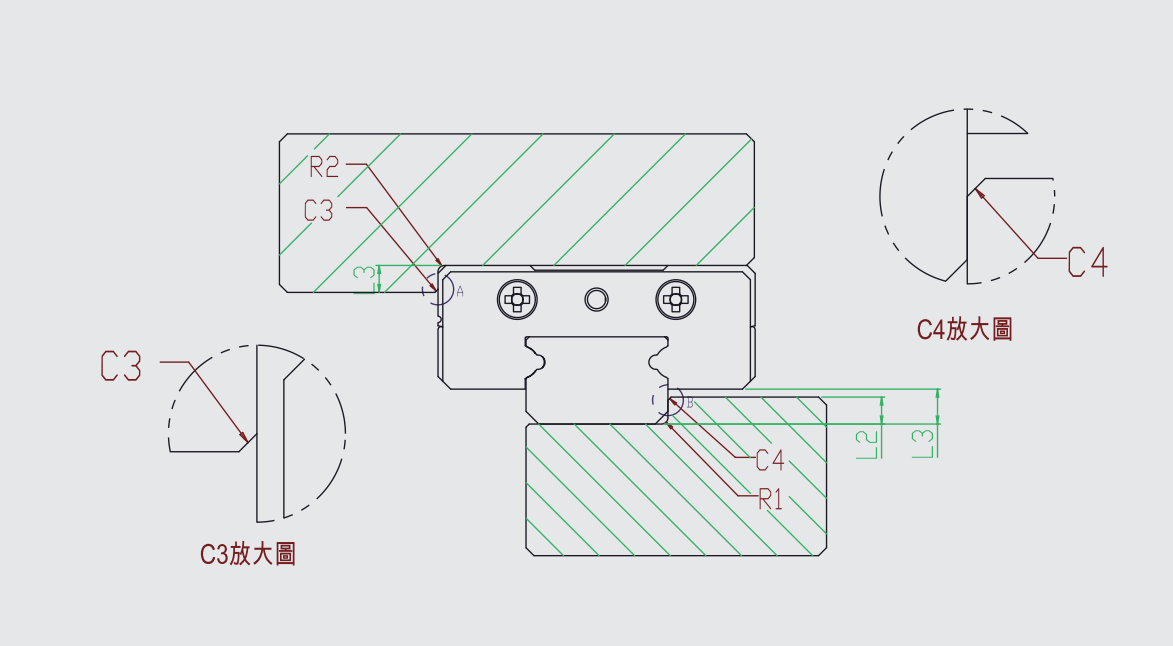


單位 : mm

| 型號 | R1 | R2 | L1 | L2 | L3 | C3 | C4 |
|---|---|---|---|---|---|---|---|
| GOOS05N | 0.1 | 0.3 | 1.6 | 1.1 | 1.5 | 0.1 | 0.1 |
| GOOS07N | 0.2 | 0.3 | 1.6 | 1.1 | 1.5 | 0.1 | 0.1 |
| GOOS09N | 0.2 | 0.3 | 2.3 | 1.8 | 2.9 | 0.1 | 0.1 |
| GOOS12N | 0.2 | 0.5 | 3.1 | 2.6 | 3.8 | 0.1 | 0.1 |
| GOOS15N | 0.3 | 0.5 | 4.1 | 3.6 | 3.8 | 0.1 | 0.1 |

| 型號 | R1 | R2 | L1 | L2 | L3 | C3 | C4 |
|---|---|---|---|---|---|---|---|
| GOOS05W | 0.1 | 0.3 | 1.6 | 1.1 | 1.8 | 0.1 | 0.1 |
| GOOS07W | 0.2 | 0.3 | 2.1 | 1.5 | 2.8 | 0.1 | 0.1 |
| GOOS09W | 0.2 | 0.3 | 3.5 | 3 | 3.5 | 0.1 | 0.1 |
| GOOS12W | 0.2 | 0.5 | 4 | 3.5 | 4 | 0.1 | 0.1 |
| GOOS15W | 0.3 | 0.5 | 4.1 | 3.6 | 4 | 0.1 | 0.1 |

◎安裝時請確認上圖指示以確保安裝後精度。

# 安裝基準面+GOOS系列間隙表

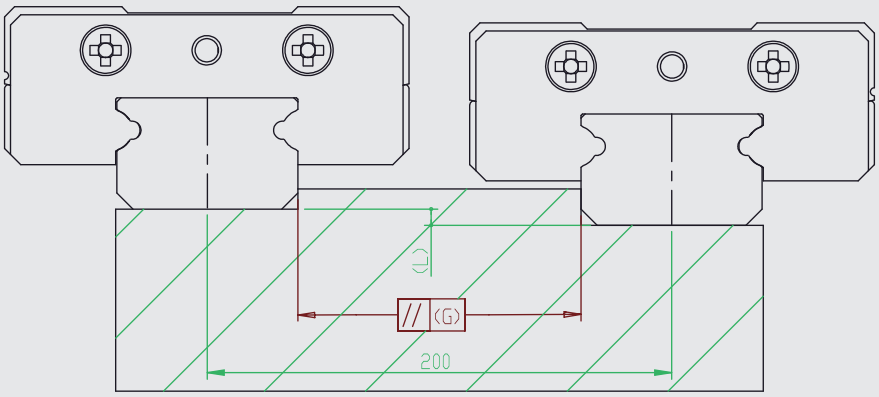


單位：μm

| 型號 | F (微間隙) | 0 (無預壓) | 1 (輕預壓) | 型號 | F (微間隙) | 0 (無預壓) | 1 (輕預壓) |
|---|---|---|---|---|---|---|---|
| GOOS05N.W(L值) | 15 | 15 | 2 | GOOS05N.W(G值) | 2 | 2 | 2 |
| GOOS07N.W(L值) | 20 | 20 | 2 | GOOS07N.W(G值) | 3 | 3 | 3 |
| GOOS09N.W(L值) | 30 | 30 | 3 | GOOS09N.W(G值) | 3 | 3 | 3 |
| GOOS12N.W(L值) | 30 | 30 | 6 | GOOS12N.W(G值) | 5 | 5 | 5 |
| GOOS15N.W(L值) | 40 | 40 | 10 | GOOS15N.W(G值) | 8 | 8 | 6 |

| 型號 | F (微間隙) | 0 (無預壓) | 1 (輕預壓) |
|---|---|---|---|
| GOOS05N.W(安裝面平面度每200mm) | 10 | 10 | 5 |
| GOOS07N.W(安裝面平面度每200mm) | 20 | 20 | 10 |
| GOOS09N.W(安裝面平面度每200mm) | 30 | 30 | 15 |
| GOOS12N.W(安裝面平面度每200mm) | 40 | 40 | 20 |
| GOOS15N.W(安裝面平面度每200mm) | 50 | 50 | 25 |

# 滑塊導角

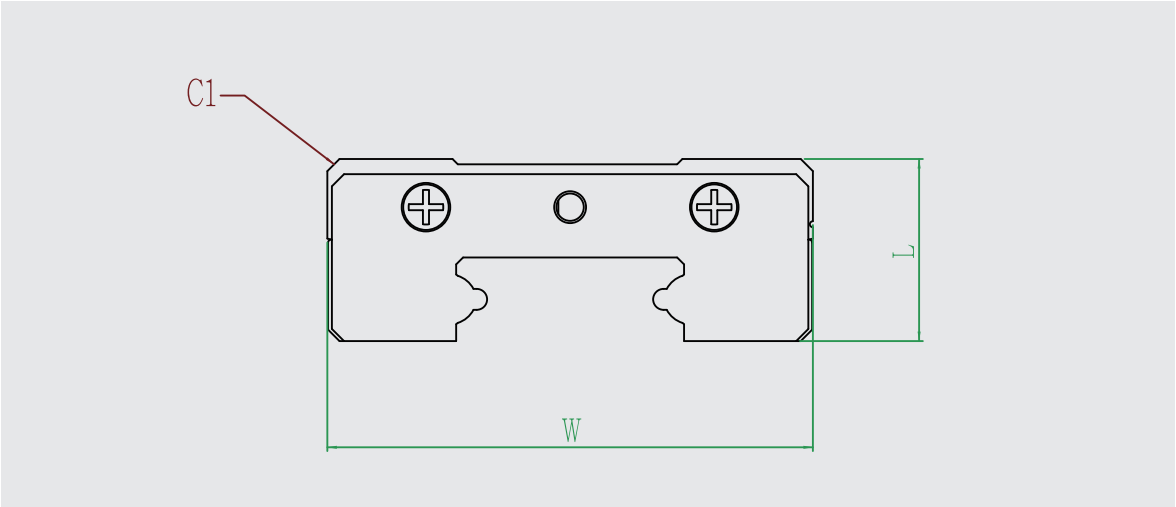


單位 : mm

| 型號 | L | W | C1 |
|---|---|---|---|
| GOOS05N | 4.5 | 12 | 0.5 |
| GOOS07N | 6.5 | 17 | 0.5 |
| GOOS09N | 7.8 | 20 | 0.5 |
| GOOS12N | 10 | 27 | 0.8 |
| GOOS15N | 12 | 32 | 0.8 |

| 型號 | L | W | C1 |
|---|---|---|---|
| GOOS05W | 5 | 17 | 0.4 |
| GOOS07W | 7.5 | 25 | 0.4 |
| GOOS09W | 8.6 | 30 | 0.6 |
| GOOS12W | 10.1 | 40 | 0.8 |
| GOOS15W | 12 | 60 | 0.8 |

預壓等級表

| 預壓等級 | | 各規格預壓間隙值(μm) | | | | |
|---|---|---|---|---|---|---|
| | | GOOS05 | GOOS07 | GOOS09 | GOOS12 | GOOS15 |
| 0 | 無預壓 | +4~+0 | +5~+0 | +5~+0 | +5~+0 | +7~+0 |
| F | 微間隙 | +2~+0 | +3~+0 | +3~+0 | +3~+0 | +4~+0 |
| 1 | 輕預壓 | 0~-1 | 0~-2 | 0~-3 | 0~-4 | 0~-5 |

# 滑軌導角

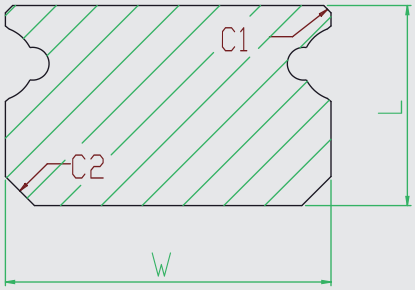


單位 : mm

| 型號 | L | W | C1 | C2 |
|---|---|---|---|---|
| GOOS05N | 3.5 | 5 | 0.2 | 0.2 |
| GOOS07N | 4.7 | 7 | 0.2 | 0.3 |
| GOOS09N | 5.5 | 9 | 0.2 | 0.5 |
| GOOS12N | 7.5 | 12 | 0.3 | 0.5 |
| GOOS15N | 9.5 | 15 | 0.45 | 0.8 |
| 型號 | L | W | C1 | C2 |
| GOOS05W | 4 | 10 | 0.2 | 0.2 |
| GOOS07W | 5.2 | 14 | 0.2 | 0.3 |
| GOOS09W | 7.3 | 8 | 0.2 | 0.5 |
| GOOS12W | 8.5 | 24 | 0.3 | 0.5 |
| GOOS15W | 9.5 | 42 | 0.45 | 0.8 |

◎安裝時請確認上圖指示以確保安裝後精度。

# 滑塊牙深

單位 : mm

| GOOYII不銹鋼規格 | | | GOOYII碳鋼規格 | | |
|---|---|---|---|---|---|
| 型號 | L(MAX) | M*L | 型號 | L(MAX) | M*L |
| GOOS05N | 500 | M2*1.5L | GOOS07N | 1000 | M2*2.5L |
| GOOS07N | 1000 | M2*2.5L | GOOS09N | 1000 | M3*3L |
| GOOS09N | 1000 | M3*3L | GOOS12N | 1000 | M3*3.5L |
| GOOS12N | 1000 | M3*3.5L | GOOS15N | 1000 | M3*5.5L |
| GOOS15N | 1000 | M3*5.5L | | | |
| 型號 | L(MAX) | M*L | 型號 | L(MAX) | M*L |
| GOOS05W | 500 | M2.5*1.5L | GOOS07W | 1000 | M3*3L |
| GOOS07W | 1000 | M3*3L | GOOS09W | 1000 | M3*3L |
| GOOS09W | 1000 | M3*3L | GOOS12W | 1000 | M3*3.5L |
| GOOS12W | 1000 | M3*3.5L | GOOS15W | 1000 | M4*4.5L |
| GOOS15W | 1000 | M4*4.5L | | | |

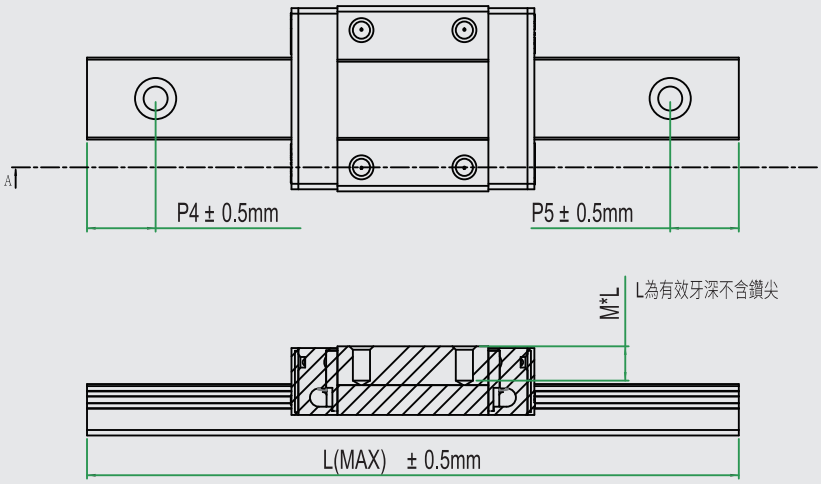

# 潤滑方式

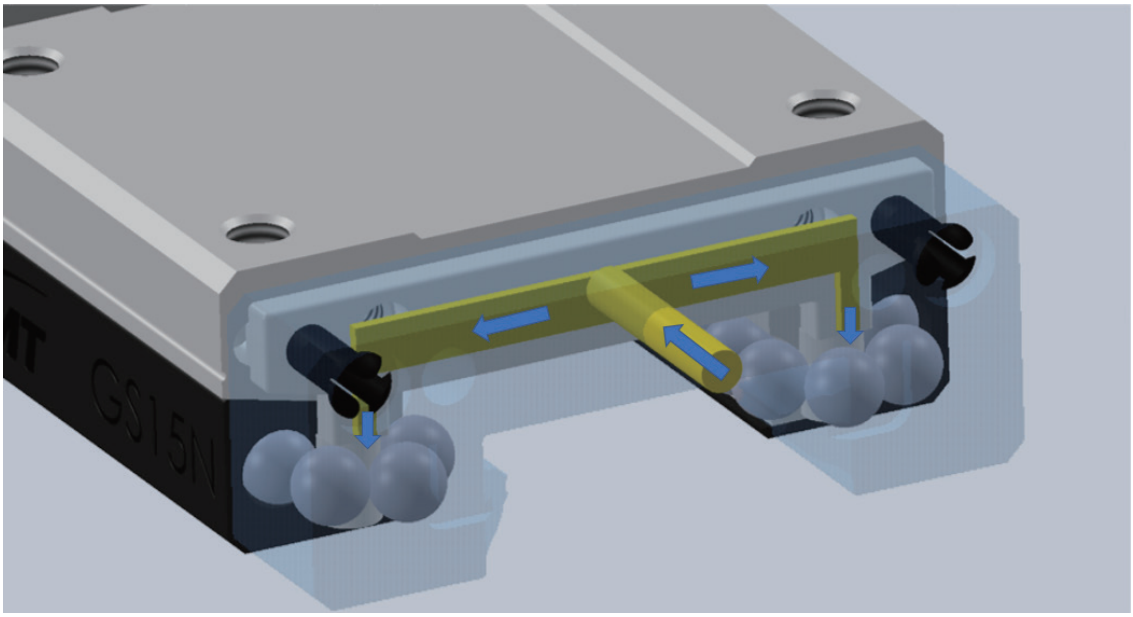


◎一般滑座潤滑時.請由兩端面注油口加入適量ISO VG32~68的油。
◎於加油同時推動滑座使滾動體、軌道及滑座均勻塗佈潤滑。
◎初次潤滑請確認潤滑油是否有塗佈於軌道面上。
◎出貨時，內部不含潤滑油脂。

# Mounting Method

Remove and clean dust and foreign objects from assembly surface of the mounting base by the oils-tone.

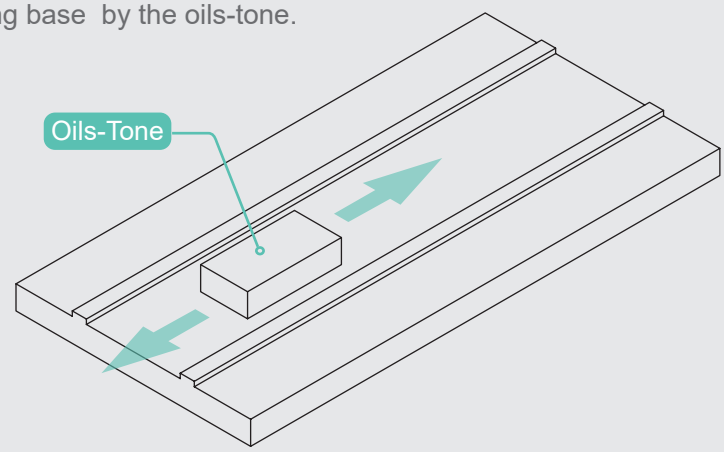


Put and align the miniature guide rail on the mounting base.

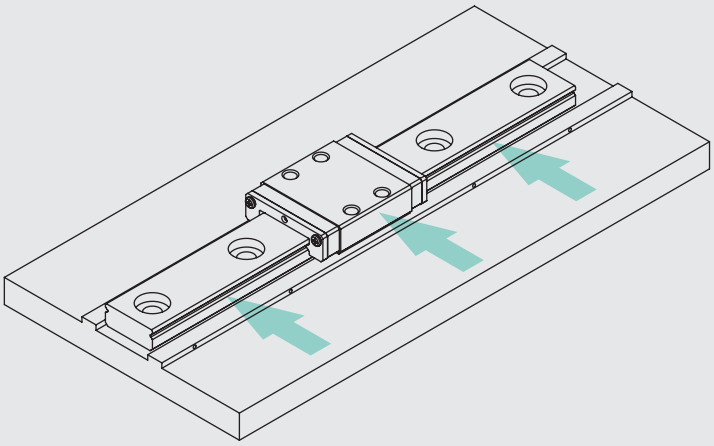

Slightly screw on bolts to check mounting holes (not fasten yet) to position the guide rail bottom surface on the mounting base roughly.

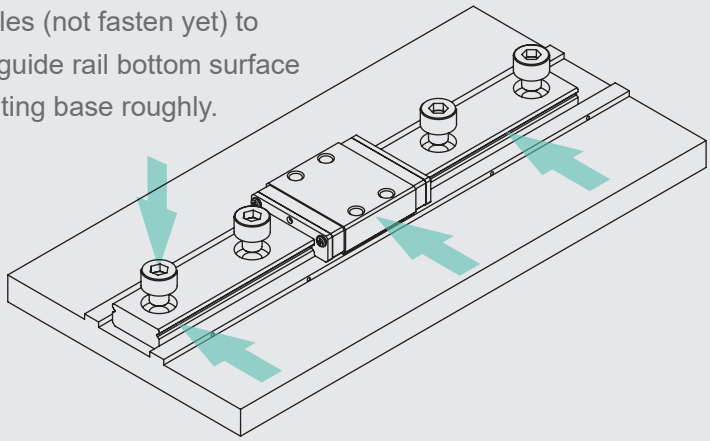

## Mounting Method



Use side-fixing screws to force the guide rail side datum surface to the assembly side tightly in sequence to ensure the guide rail location.

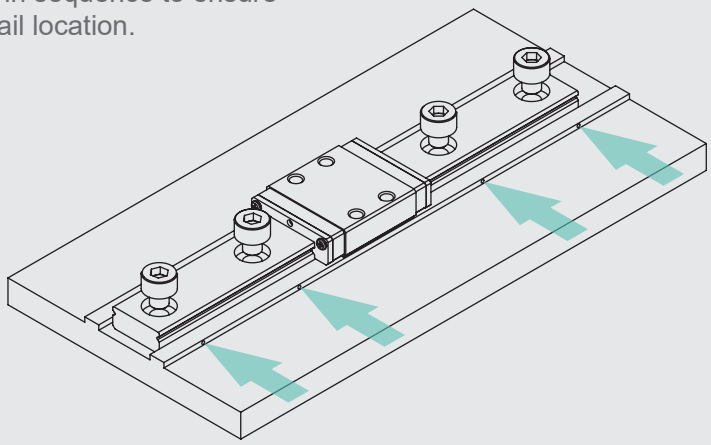

Tighten each bolt to force the guide rail bottom base on the assembly surface by the wrench in sequence securely.

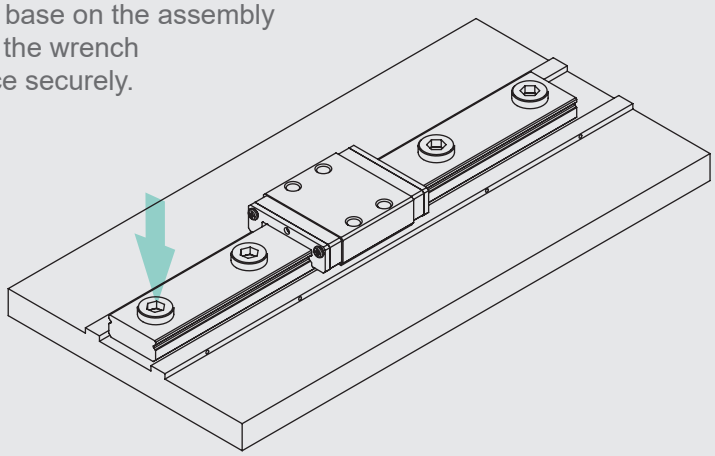

Follow step 1 to step 5 repeatably to assembly other guide rails.

Model No. Introduction

## Specification Introduction

| Product Type | Block Type | | Block Quantity | Accuracy Grade | | Preload Grade | |
|---|---|---|---|---|---|---|---|
| Miniature | N | Standard length | Blocks on each rail | P | Precision grade | F | Micro-clearance |
| | L | Long block | | H | High grade | 0 | No preload |
| | | | | N | Standard grade | 1 | Light preload |

GOOS 05 - N 2 - N 2 - 200L - P - 0

| Nominal Dimensions | Rail Type | | Rail Quantity | Rail Length |
|---|---|---|---|---|
| 05 | N | Standard width | Required rail quantity per axis | Refer to P. 9 for standard length. Note: Length out of standard is available on request. |
| 07 | W | Wide rail | | |
| 09 | | | | |
| 12 | | | | |
| 15 | | | | |

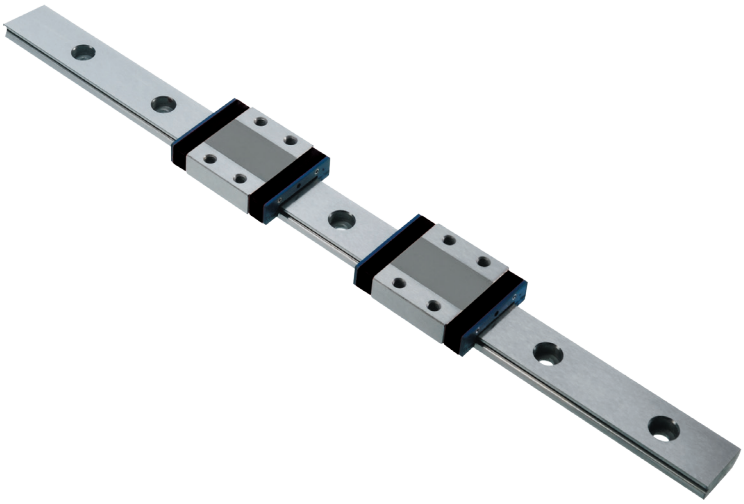

# End Pitch & Rail Length

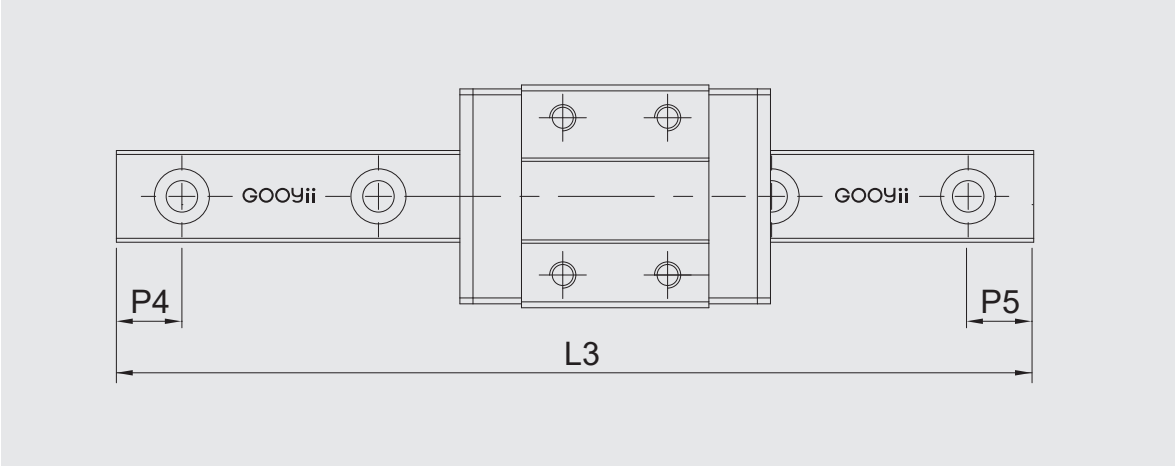


Unit : mm

| Specifications | GSN | | | | | GSW | | | | |
|---|---|---|---|---|---|---|---|---|---|---|
| | 5N | 7N | 9N | 12N | 15N | 5W | 7W | 9W | 12W | 15W |
| Standard Length | 40 | 40 | 55 | 70 | 70 | 50 | 50 | 50 | 70 | 110 |
| | 55 | 55 | 75 | 95 | 110 | 70 | 80 | 80 | 110 | 150 |
| | 70 | 70 | 95 | 120 | 150 | 90 | 110 | 110 | 150 | 190 |
| | 85 | 85 | 115 | 145 | 190 | 110 | 140 | 140 | 190 | 230 |
| | 100 | 100 | 135 | 170 | 230 | 130 | 170 | 170 | 230 | 270 |
| | N/A | 130 | 155 | 195 | 270 | 150 | 200 | 200 | 270 | 310 |
| | | N/A | 175 | 220 | 310 | 170 | 260 | 260 | 310 | 430 |
| | | | 195 | 245 | 350 | N/A | 290 | 290 | 390 | 550 |
| | | | 275 | 270 | 390 | | N/A | 320 | 470 | 670 |
| | | | 375 | 320 | 430 | | | N/A | 550 | 790 |
| | | | N/A | 370 | 470 | | | | N/A | N/A |
| | | | | 470 | 550 | | | | | |
| | | | | 570 | 670 | | | | | |
| | | | | N/A | 870 | | | | | |
| Pitch | 15 | 15 | 20 | 25 | 40 | 20 | 30 | 30 | 40 | 40 |
| Standard End Pitch(P4) | 3 | 3 | 4 | 4 | 4 | 4 | 3 | 4 | 4 | 4 |
| Standard End Pitch (P5) | 3 | 3 | 4 | 4 | 4 | 4 | 3 | 4 | 4 | 4 |
| Available Max. End Pitch | 10 | 10 | 20 | 20 | 35 | 15 | 25 | 25 | 35 | 35 |
| Max. Rail Length | 1000 | 1000 | 1000 | 1000 | 1000 | 1000 | 1000 | 1000 | 1000 | 1000 |

## Standard Width Type

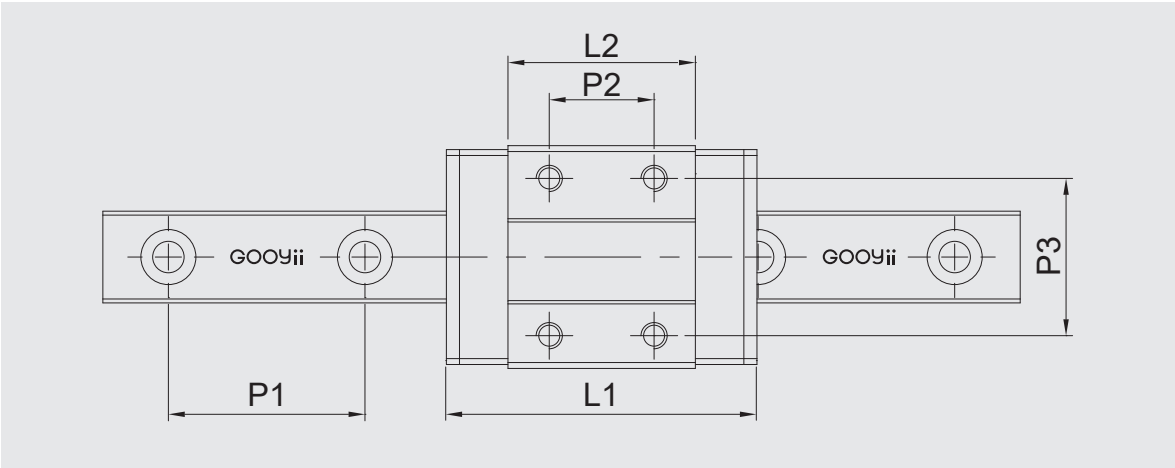


| Model No. | Assembled Dimensions | | Rail Dimensions | | | | Block Dimensions | | | |
|---|---|---|---|---|---|---|---|---|---|---|
| | H2 | W3 | W2 | H1 | P1 | ØDxØdxh1 | W1 | L1 | L2 | H3 |
| GOOS05-N-N | 6 | 3.5 | 5 | 3.5 | 15 | 3.5x2.4x1 | 12 | 16 | 10 | 4.5 |
| GOOS05-N-L | 6 | 3.5 | 5 | 3.5 | 15 | 3.5x2.4x1 | 12 | 19.6 | 13.5 | 4.5 |
| GOOS07-N-N | 8 | 5 | 7 | 4.7 | 15 | 4.2x2.4x2.3 | 17 | 23.7 | 14.3 | 6.5 |
| GOOS07-N-L | 8 | 5 | 7 | 4.7 | 15 | 4.2x2.4x2.3 | 17 | 31.2 | 21.8 | 6.5 |
| GOOS09-N-N | 10 | 5.5 | 9 | 5.5 | 20 | 6x3.5x3.5 | 20 | 30.6 | 20.5 | 7.8 |
| GOOS09-N-L | 10 | 5.5 | 9 | 5.5 | 20 | 6x3.5x3.5 | 20 | 40.9 | 30.8 | 7.8 |
| GOOS12-N-N | 13 | 7.5 | 12 | 7.5 | 25 | 6x3.5x4.5 | 27 | 35.4 | 22 | 10 |
| GOOS12-N-L | 13 | 7.5 | 12 | 7.5 | 25 | 6x3.5x4.5 | 27 | 47.6 | 34 | 10 |
| GOOS15-N-N | 16 | 8.5 | 15 | 9.5 | 40 | 6x3.5x4.5 | 32 | 43 | 27 | 12 |
| GOOS15-N-L | 16 | 8.5 | 15 | 9.5 | 40 | 6x3.5x4.5 | 32 | 60 | 44 | 12 |

◎ Plug thickness 1.5 mm of each is not included in block length L1.

# Standard Width Type

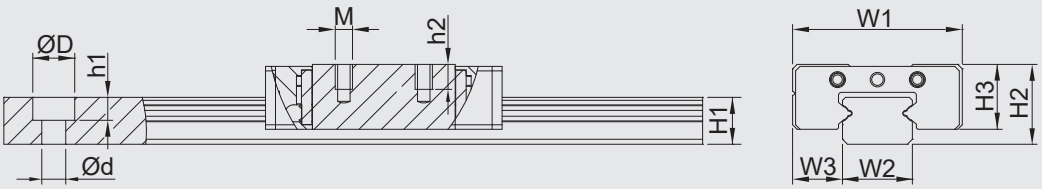


| Model No. | Block Dimensions | | | Rated Loading | | Static Torque | | | Weight | |
|---|---|---|---|---|---|---|---|---|---|---|
| | P2 | P3 | Mxh2 | C | C0 | $M_R$ | $M_P$ | $M_Y$ | Block | Rail |
| GOOS05-N-N | - | 8 | M2x1.5 | 318 | 523 | 1.6 | 1.0 | 1.0 | 3 | 114 |
| GOOS05-N-L | 7 | - | M2.6x2.0 | 447 | 855 | 2.3 | 2.0 | 2.0 | 4 | 114 |
| GOOS07-N-N | 8 | 12 | M2x2.5 | 846 | 1330 | 4.9 | 3.1 | 3.1 | 8 | 211 |
| GOOS07-N-L | 13 | 12 | M2x2.5 | 1245 | 2318 | 8.6 | 7.3 | 7.3 | 14 | 211 |
| GOOS09-N-N | 10 | 15 | M3x3.0 | 1492 | 2370 | 11.1 | 6.1 | 6.1 | 18 | 295 |
| GOOS09-N-L | 16 | 15 | M3x3.0 | 2028 | 3686 | 17.3 | 11.8 | 11.8 | 27 | 295 |
| GOOS12-N-N | 15 | 20 | M3x3.5 | 2193 | 3292 | 20.4 | 12.3 | 12.3 | 33 | 590 |
| GOOS12-N-L | 20 | 20 | M3x3.5 | 3078 | 5349 | 33.2 | 28.7 | 28.7 | 50 | 590 |
| GOOS15-N-N | 20 | 25 | M3x5.5 | 3620 | 5311 | 41.4 | 25.7 | 25.7 | 60 | 911 |
| GOOS15-N-L | 25 | 25 | M3x5.5 | 5083 | 8626 | 66.5 | 60.1 | 60.1 | 88 | 911 |

◎ Plug thickness 1.5 mm of each is not included in block length L1.

# Wide Rail Type

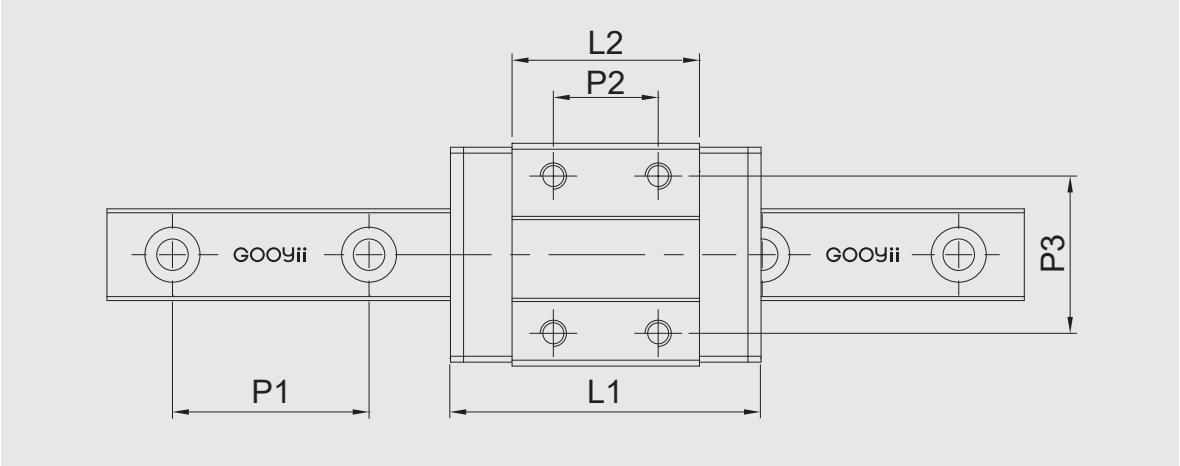


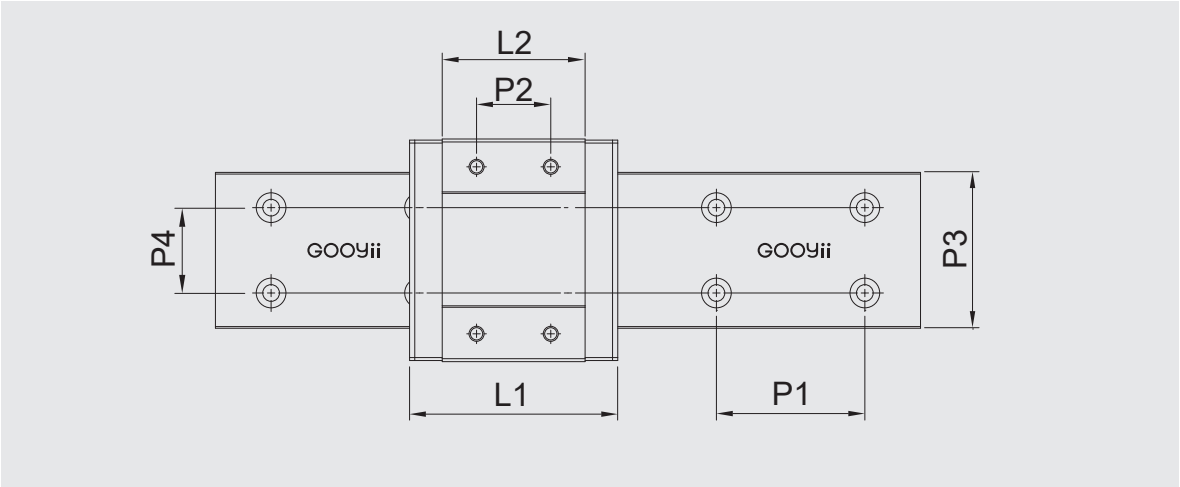


◎ Dimension P4 is referred to GOOS15-W-N / GOOS15-W-L models.

| Model No. | Assembled Dimensions | | Rail Dimensions | | | | | Block Dimensions | | | |
|---|---|---|---|---|---|---|---|---|---|---|---|
| | H2 | W3 | W2 | H1 | P1 | P4 | ØDxØdxh1 | W1 | L1 | L2 | H3 |
| GOOS05-W-N | 6.5 | 3.5 | 10 | 4 | 20 | | 5.5x3x1.6 | 17 | 21.1 | 15.1 | 5 |
| GOOS05-W-L | 6.5 | 3.5 | 10 | 4 | 20 | | 5.5x3x1.6 | 17 | 27.2 | 21.2 | 5 |
| GOOS07-W-N | 9 | 5.5 | 14 | 5.2 | 30 | | 6x3.5x3.5 | 25 | 31.6 | 21.2 | 7 |
| GOOS07-W-L | 9 | 5.5 | 14 | 5.2 | 30 | | 6x3.5x3.5 | 25 | 40.5 | 30.1 | 7 |
| GOOS09-W-N | 12 | 6 | 18 | 7.3 | 30 | | 6x3.5x4.5 | 30 | 39.1 | 27.9 | 8.6 |
| GOOS09-W-L | 12 | 6 | 18 | 7.3 | 30 | | 6x3.5x4.5 | 30 | 50.7 | 39.5 | 8.6 |
| GOOS12-W-N | 14 | 8 | 24 | 8.5 | 40 | | 8x4.5x4.5 | 40 | 44.4 | 31 | 10.1 |
| GOOS12-W-L | 14 | 8 | 24 | 8.5 | 40 | | 8x4.5x4.5 | 40 | 59.4 | 46 | 10.1 |
| GOOS15-W-N | 16 | 9 | 42 | 9.5 | 40 | 23 | 8x4.5x4.5 | 60 | 55.3 | 38.5 | 12 |
| GOOS15-W-L | 16 | 9 | 42 | 9.5 | 40 | 23 | 8x4.5x4.5 | 60 | 74.4 | 57.6 | 12 |

◎ Plug thickness 1.5 mm of each is not included in block length L1.

# Wide Rail Type

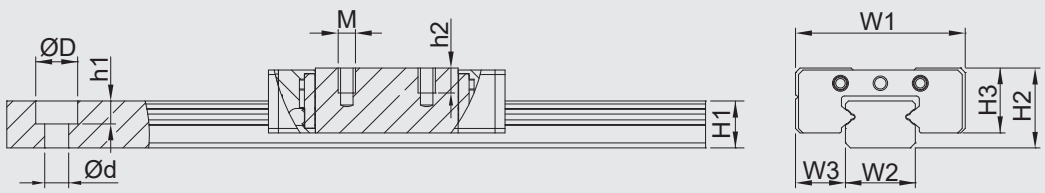


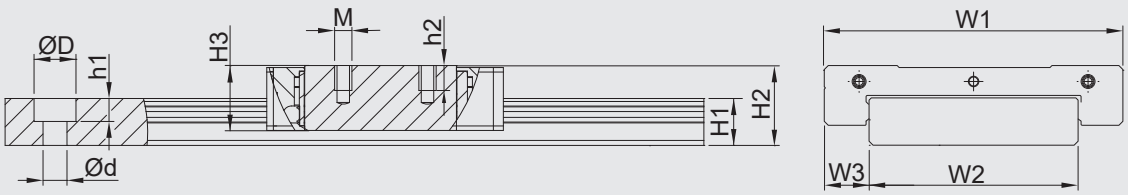


◎ Dimension P4 is referred to GOOS15-W-N / GOOS15-W-L models.

| Model No. | Block Dimensions | | | Rated Loading | | Static Torque | | | Weight | |
|---|---|---|---|---|---|---|---|---|---|---|
| | P2 | P3 | Mxh2 | C | C0 | $M_R$ | $M_P$ | $M_Y$ | Block | Rail |
| GOOS05-W-N | 6.5 | 13 | M2.5x1.5 | 451 | 855 | 4.4 | 2.1 | 2.1 | 6 | 274 |
| GOOS05-W-L | 11 | 13 | M2.5x1.5 | 584 | 1249 | 6.5 | 3.9 | 3.9 | 8 | 274 |
| GOOS07-W-N | 10 | 19 | M3x3 | 1121 | 1990 | 14.3 | 6.9 | 6.9 | 19 | 506 |
| GOOS07-W-L | 19 | 19 | M3x3 | 1492 | 2983 | 21.5 | 14.2 | 14.2 | 26 | 506 |
| GOOS09-W-N | 12 | 21 | M3x3 | 1929 | 3425 | 31.5 | 13.0 | 13.0 | 36 | 921 |
| GOOS09-W-L | 24 | 23 | M3x3 | 2423 | 4741 | 43.6 | 25.4 | 25.4 | 50 | 921 |
| GOOS12-W-N | 15 | 28 | M3x3.5 | 2912 | 4940 | 60.5 | 25.0 | 25.0 | 64 | 1443 |
| GOOS12-W-L | 28 | 28 | M3x3.5 | 3867 | 7410 | 90.8 | 53.6 | 53.6 | 91 | 1443 |
| GOOS15-W-N | 20 | 45 | M4x4.5 | 4812 | 7966 | 163.1 | 43.4 | 43.4 | 134 | 2762 |
| GOOS15-W-L | 35 | 45 | M4x4.5 | 6389 | 11951 | 244.7 | 88.4 | 88.4 | 196 | 2762 |

◎ Plug thickness 1.5 mm of each is not included in block length L1.